NTG SERVICES

CUSTOMER NUMBER

# FARINA

## PARTS CATALOGUE

www.bmcfarina.com

British Motor Heritage Approved

## NTG - A Brief History

NTG was founded in the late summer of 1966 when Barry **N**aunton, Clive **T**anner and Mike **G**reen all MG T type owners were offered a partly dismantled MGTA for the princely sum of £15. The car was purchased and dismantled with some parts being used on their own vehicles and the rest advertised for sale. Quite quickly these parts went to other enthusiasts and the funds used to purchase further derelict MGs creating a part time business for them. Several customers started requesting new spares also, so a few new items were added from local sources or commissioned for small production runs and the first catalogue list was created. In 1969 Clive moved away from the area and sold his shares to Dick Bird, Mikes brother in law who organised the book keeping and accounting as well as researching and sourcing many new parts to add to the inventory. The first illustrated catalogue for the T & Y Series was launched in 1970 with a further catalogue for the MGA & Z Series added in 1974.

Our world wide reputation was recognised by British Leyland when we were invited to become founder members of British Motor Heritage. This organisation is the classic car industry watchdog and membership has given us access to original workshop drawings for the manufacture of many new parts.

Paul Banyard joined the company in 1985 bringing computer and stores experience helping us move forward with our online shopping websites and computerised stock control systems.

### The Farina Range

We were approached by Taffy Gillingham from the Cambridge Oxford Owners club in the late 1980s with a request for us to venture into supplying parts for the 1.5 litre range of vehicles (1959-71) with the offer of his vast experience and an introduction to Colin Smith. An MG Mk4 was located amongst his collection of vehicles and a winter project to make it roadworthy was launched by Paul & Colin. Giving a good few years of service, Paul gained experience of running and maintaining a Farina and we now offer a comprehensive range of parts for these vehicles alongside our earlier MG range. As a thank you to the Cambridge Oxford Owners club for all their assistance we offer a unique 10% discount to all their fully paid up members.

Our websites www.bmcfarina.com & www.mgbits.com contain many photographs of our parts with fitting instructions and snippets of relevant information and secure online purchasing. We even have an online 'Live Support' message system which has proved invaluable to many a visitor.

Mike and Paul now run the business as co-directors with the valued assistance of our telephone and online sales staff, book keeper and packing staff. Barry Naunton, original partner of NTG has re-joined the company running a small workshop for refurbishment of used parts, which we stock when new items are not available. Visitors to our shop premises in Ipswich are always made most welcome and we will do our utmost to continue to offer a top service to one and all!

## Identification & Model Codes

**F1**
1489cc Engine
(1958 - 61)

| | |
|---|---|
| Austin A55 Mk2 | A5 |
| Morris Oxford Series 5 | MO5 |
| MG Magnette Mk3 | MG3 |
| Riley 4/68 | R6 |
| Wolseley 15/60 | W15 |

**F2**
1622cc Engine
(1961 - 71)

| | |
|---|---|
| Austin A60 | A6 |
| Morris Oxford Series 6 | MO6 |
| MG Magnette Mk 4 | MG4 |
| Riley 4/72 | R7 |
| Wolseley 16/60 | W16 |

A/M/W = Austin Morris Wolseley  LHD = Left Hand Drive  RHD = Right Hand Drive  EX* = Exchange

# Index


7 Air Cleaner
35 Auxiliary Lamps
18 Axle - Front
24 Axle - Rear
61 Badges & Decals
39 Bonnet Assembly
40 Boot Assembly
22 Brake Fittings
20 Brakes - Front
21 Brakes - Rear
47 Bumper - Front
48 Bumper - Rear
11 Carburettor - HD4
10 Carburettor - HS2
36 Chassis
16 Clutch
2 Cylinder Head
27 Dashboard
41 Door - Front
43 Door - Rear
42 Door Glass - Front
44 Door Glass - Rear
26 Electrical
3 Engine External
4 Engine Internal
9 Exhaust
12 Fuel System
14 Gearbox External
15 Gearbox Internal
54 Grille Assembly
21 Hand Brake
31 Head Lamp
58 Heater Assembly
19 Hub Assembly - Front
25 Ignition
49 Interior Trim
32 Lamp - Front
33 Lamp - Rear
23 Leaf Spring (Rear Spring)
7 Manifolds
8 Mounting - Gearbox
8 Mountings - Engine
6 Oil Filter
13 Radiator & Cooling
45 Screen - Rear
53 Seat Runners
50 Seats
60 Servicing Data
23 Shock Absorber - Rear
17 Steering
5 Technical Data
1 Unit Number Locations
46 Wheels
45 Windscreen
37 Wing - Front
38 Wing - Rear
29 Wipers & Washers


---


**Contact Details & Opening Hours**

Telephone: 00++ (0)1473 406031
Fax: 00++ (0)1473 743133
email: sales@bmcfarina.com
Website: www.bmcfarina.com


**Shop Opening Hours:**

Monday - Friday 9am to 5pm
Saturday 10am to 12:30


NTG Motor Services Limited
282-4 Bramford Road
Ipswich Suffolk
IP1 4AY


**Customer Number** - Your customer number found on the front cover and invoice is unique to you. When you order from us you need only to quote it and we will have details of your name, address and vehicle readily to hand. *This can save considerable time and expense when telephoning*.

# Location of Unit Numbers

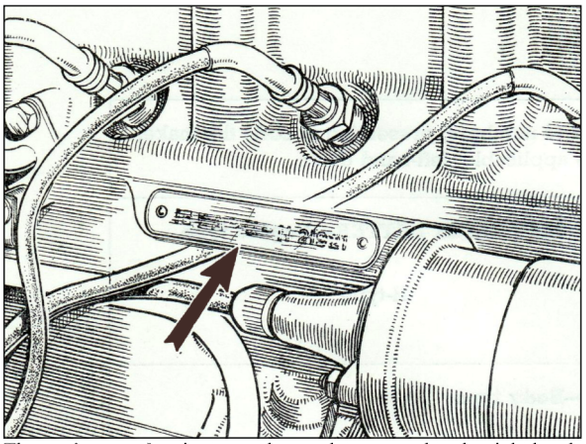

The **engine number** is stamped on a plate secured to the right hand side of the cylinder block.

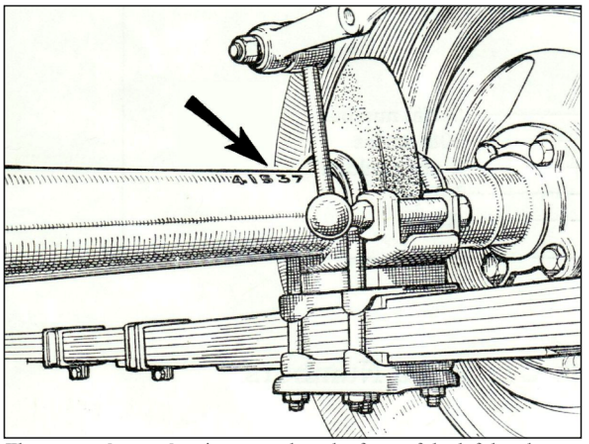


The **rear axle number** is stamped on the front of the left hand rear axle tube.

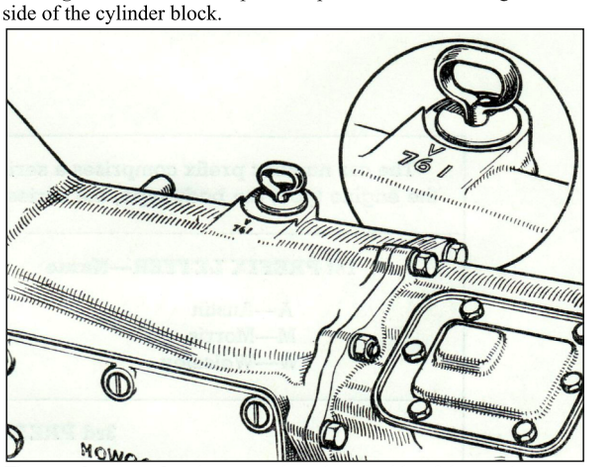

The **gearbox number** is stamped on the top side of the gearbox casing adjacent to the dipstick (Austin, Morris, Wolseley & Early MG & Riley).

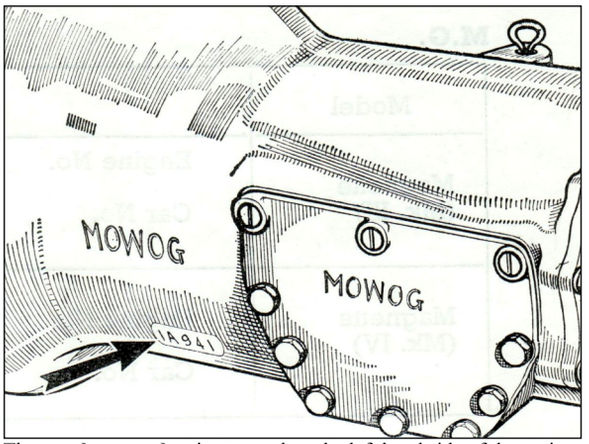


The **gearbox number** is stamped on the left hand side of the casing forward of the side cover (Late MG & Riley).

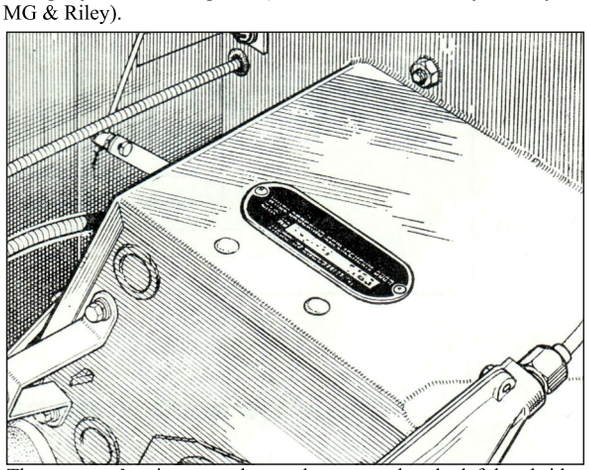

The **car number** is stamped on a plate secured to the left hand side dash panel.

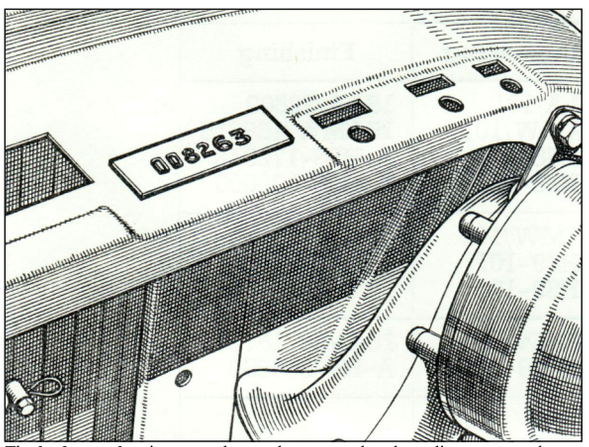


The **body number** is stamped on a plate secured to the radiator mounted bridge piece (Austin).

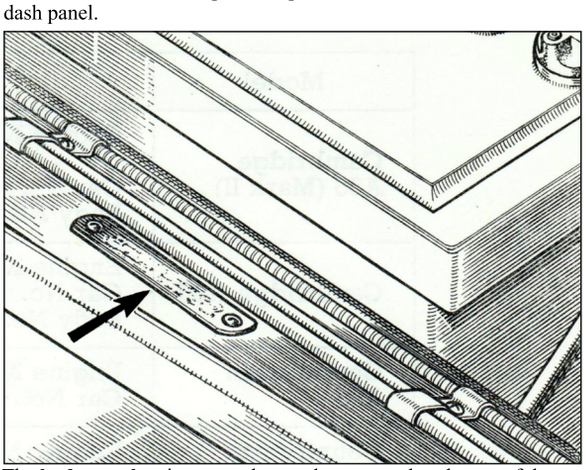

The **body number** is stamped on a plate secured to the top of the right hand front wing valance (Morris Series 5, Wolseley 15/60, MG Mk3 & Riley 4/68).

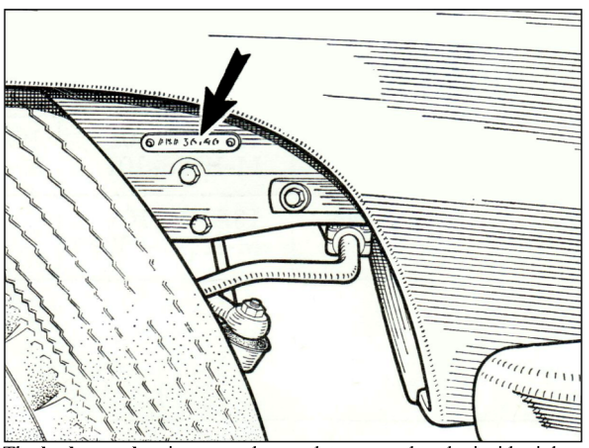

The **body number** is stamped on a plate secured to the inside right hand wing valance (Morris Series 6, Wolseley 16/60, MG Mk4 & Riley 4/72).

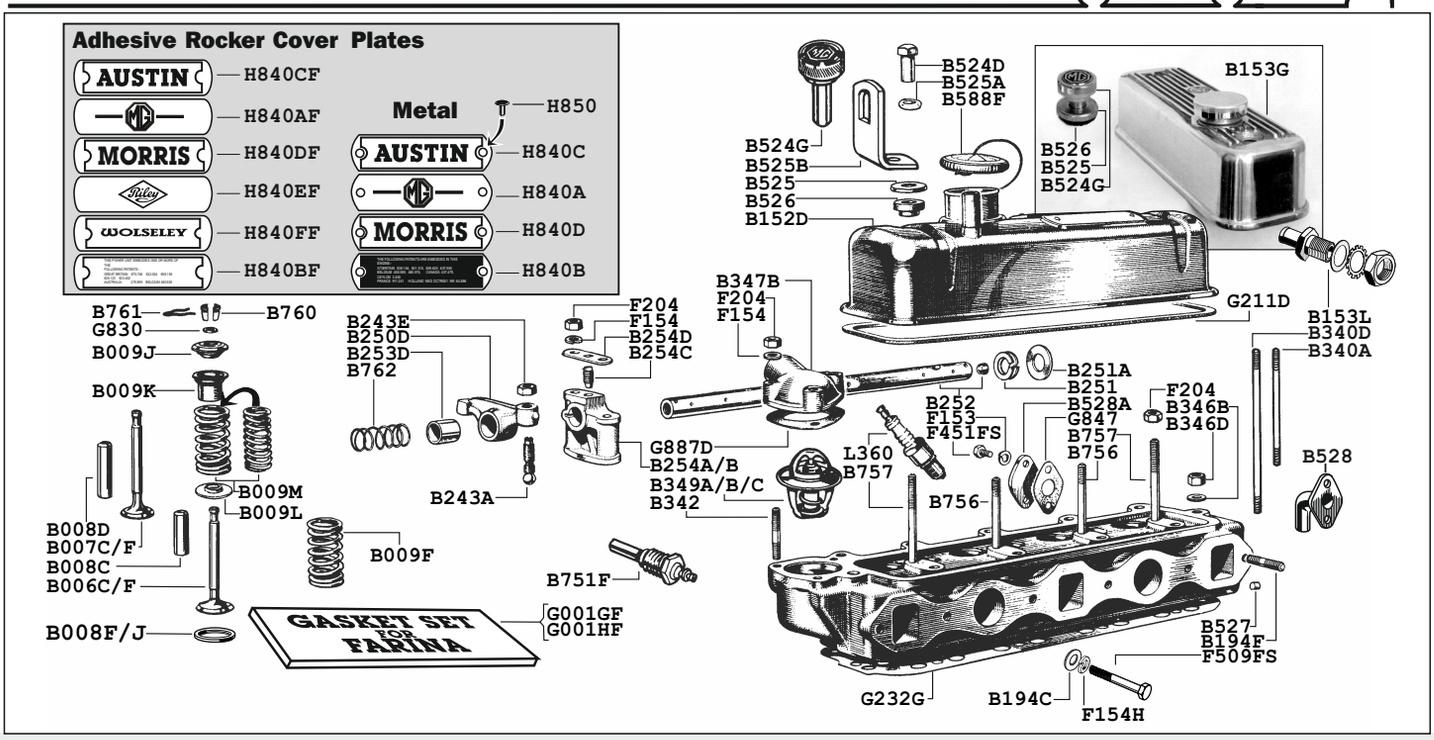


**Unleaded Cylinder Heads (Exchange)**

*All our cylinder heads are crack tested, caustic soda cleaned, grit blasted and hot washed to clean water ways. Supplied with new Valve Springs, Manganese Silicon bronze valve guides, Stainless steel Valves, and lead-free compatible seat inserts machined with 3 angles to increase BHP by 7%.*

**B502GX** Head Assembly-Unleaded 1500cc **B503GX** Head Assembly-Unleaded 1622cc **B504GX** Head Assembly-Unleaded 1622cc

**Performance Unleaded Kits –**

*Kit contains: - Inlet Valves x 4, Exhaust Valves x 4, Valve Guides x 8, Valve Seat Inserts x 4, Head Gasket, Rocker Cover Gasket, Side-Plate Gasket, Manifold Gasket, Valve Stem Oil Seals x 8 & Instructions.*

| | | **B510K** | A5/MO5/W15 | **B510L** | MG3/MG4/R6/R7 | **B510M** | A6/MO6/W16 |
|---|---|---|---|---|---|---|---|
| B006C | Valve-Inlet | 4 | A6/MO6/MG3/4/R6/7/W16 | B525A | Spacer-Rocker Cover Nut | 2 | All |
| B006F | Valve-Inlet | 4 | A5/MO5/W15 | B525B | Bracket | 2 | All |
| B007C | Valve-Exhaust | 4 | A6/MO6/MG3/4/R6/7/W16 | B526 | Bush-Rocker Cover | 2 | All |
| B007F | Valve-Exhaust | 4 | A5/MO5/W15 | B527 | Plug-Oil Feed | 1 | All |
| B008C | Guide-Inlet | 4 | All | B528 | Heater Outlet | 1 | All |
| B008D | Guide-Exhaust | 4 | All | B528A | Blanking Plate | 1 | All (None heater models only) |
| B008F | Exhaust Valve Seat | 4 | A5/MO5/W15 | B588D | Filler Cap (Metal) | 1 | Early |
| B008J | Exhaust Valve Seat | 4 | A6/MO6/MG3/4/R6/7/W16 | B588F | Filler Cap (Plastic) | 1 | Late |
| B009F | Valve Spring Set | 1 | A/M/W | B751F | Temp. Sender Unit | 1 | All |
| B009J | Top Cap-Valve Spring | 8 | All | B756 | Stud-Rocker Pillar (Short) | 2 | All |
| B009K | Shroud | 8 | All | B757 | Stud-Rocker Pillar (Long) | 2 | All |
| B009L | Collar-Bottom | 8 | All | B760 | Cotters-Valve | 16 | All |
| B009M | Valve Spring Set | 1 | MG3/4/R6/7 | B761 | Clip-Valve | 8 | All |
| B152D | Rocker Cover-Steel | 1 | All | B762 | Spring-Rocker Shaft | 3 | All |
| B153G | Rocker Cover-Alloy | 1 | MG3/4 | | | | |
| B153GZ | Rocker Cover-Alloy | 1 | A/M/W | F153 | Spring Washer 1/4" | | |
| B153L | Adapter-Alloy Cover | 1 | All | F154 | Spring Washer 5/16” | | |
| B155A | Oil Cooler 10 Row | | | F154H | Spring Washer (HD) 5/16” | | |
| B155B | Oil Cooler 13 Row | | | F204 | Plain Nut 5/16” UNF | | |
| B194C | Clamp-Manifold | 4 | All | F451FS | Set Screw 1/4" UNF x 1/2" | | |
| B194F | Stud-Man to Head | 2 | All | F509FS | Set Screw 5/16” UNF x 1 1/2" | | |
| B243A | Screw-Tappet Adjuster | 8 | All | | | | |
| B243E | Locknut-Tappet Screw | 8 | All | G001GF | Gasket Set-Head | 1 | A5/6/MO5/6/W15/16 |
| B250D | Rocker-Bushed | 8 | All | G001HF | Gasket Set-Head | 1 | MG3/4/R6/7 |
| B251 | Double Spring Washer | 2 | All | G211D | Gasket-Rocker Cover | 1 | All |
| B251A | Plain Washer | 2 | All | G232G | Gasket-Head | 1 | All |
| B252 | Rocker Shaft | 1 | All | G830 | Oil Seal-Valve Stem (8) | 1 | All |
| B253D | Bush - Rocker | 8 | All | G847 | Gasket-Heater outlet | 1 | All |
| B254A | Pillar - Tapped | 1 | All | G887D | Gasket-Thermostat | 1 | All |
| B254B | Pillar - Plain | 3 | All | | | | |
| B254C | Locating Screw | 1 | All | H840A | Plate-Metal "MG" | 1 | MG3/4 |
| B254D | Lock Plate | 1 | All | H840AF | Sticker “MG” | 1 | MG3/4 |
| B340A | Stud-Head-Short | 7 | All | H840B | Plate-Metal-Patents | 1 | MG3/4/R6/7/W15/16 |
| B340D | Stud-Head-Long | 4 | All | H840BF | Sticker “PATENTS” | 1 | A5/6/MO5/6 |
| B342 | Stud-Thermostat | 3 | All | H840C | Plate-Metal "AUSTIN" | 1 | A5/6 |
| B346B | Washer-Head Stud | 11 | All | H840CF | Sticker “AUSTIN “ | 1 | A5/6 |
| B346D | Nut-Cylinder Head | 11 | All | H840D | Plate-Metal "MORRIS" | 1 | MO5/6 |
| B347B | Cover-Thermostat | 1 | All | H840DF | Sticker “MORRIS” | 1 | MO5/6 |
| B349A | Thermostat (Hot) 74C | | All | H840EF | Sticker “RILEY” | 1 | R6/7 |
| B349B | Thermostat (Std) 82C | | All | H840FF | Sticker “WOLSELEY” | 1 | W15/16 |
| B349C | Thermostat (Winter) 88C | | All | H850 | Rivet-Rocker Cover | 4 | All |
| B524D | Nut-Rocker Cover | 2 | All | | | | |
| B524G | Nut-Rocker Cover (Chrm) | | All | L360 | Spark Plug-CHAMPION | 4 | All |
| B525 | Cup Washer | 2 | All | | | | |

# Engine - External

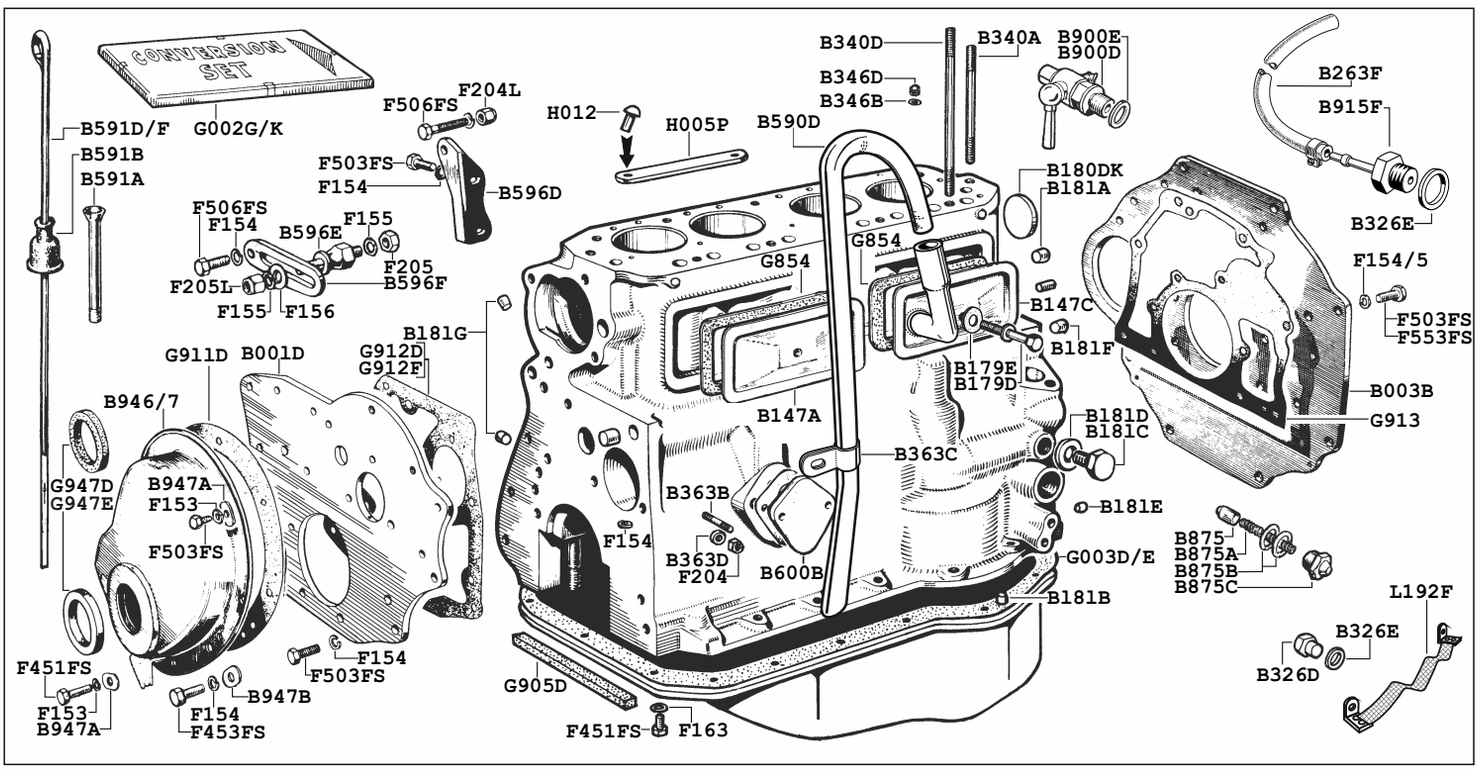


| | | | |
|---|---|---|---|
| B001D | 1 | Mount Plate-Front | All |
| B003B | 1 | Mount Plate-Rear | All |
| B147A | 1 | Side Plate-Front | All |
| B147C | 1 | Side Plate-Rear | All |
| B179D | 2 | Bolt-Sideplate | All |
| B179E | 2 | Fibre Washer-Sideplate | All |
| B180DK | 1 | Core Plug (set 4) | All |
| B181A | 4 | Plug-Oil Gallery | All |
| B181B | 2 | Plug-Crankcase Oil Hole | All |
| B181C | 1 | Plug-Transverse Oil Hole | All |
| B181D | 1 | Washer-Transverse Plug | All |
| B181E | 2 | Plug-Under Relief Valve | All |
| B181F | 3 | Plug-Oil Gallery | All |
| B181G | 2 | Plug-Tens. Feed & Filter | All |
| B263F | 1 | Rubber Oil Pipe + Clips | All |
| B263FS | 1 | Stainless Oil Pipe + Clips | All |
| B326D | 1 | Plug-Sump | All |
| B326E | 2 | Washer-Sump Plug + Union | All |
| B340A | 7 | Head Stud-Short | All |
| B340D | 4 | Head Stud-Long | All |
| B346B | 11 | Washer-Head Stud | All |
| B346D | 11 | Nut-Head Stud | All |
| B363B | 2 | Stud-Blanking Plate | All |
| B363C | 1 | Clip-Breather Pipe | All |
| B363D | 1 | Spacer-Breather Pipe | All |
| B590D | 1 | Breather Pipe | |
| B591A | 1 | Tube-Engine Dipstick | All |
| B591B | 1 | Dust Cover-Dipstick | All |
| B591C | 1 | Oil Dipstick-Straight | Early F1 |
| B591D | 1 | Oil Dipstick-Cranked | Late F1+F2 |
| B596D | 1 | Bracket-Dynamo-Rear | All |
| B596E | 1 | Pillar-Dynamo Adjuster | All |
| B596F | 1 | Adjuster Link-Dynamo | All |
| B600A | 1 | Repair Kit-Lift Pump | |
| B600B | 1 | Blanking Plate-Elec. Pump | |
| B600X | 1 | Mechanical Lift Pump exch* | |
| B875 | 1 | Relief Valve-Oil Press | All |
| B875A | 1 | Spring-Relief Valve | All |
| B875B | 1 | Cap Nut-Relief Valve | All |
| B875C | 1 | Washer-Relief Valve | All |
| B884A | 1 | Washer-Drain Tap | All |
| B900D | 1 | Drain Tap-Block | All |
| B915F | 1 | Union-Oil Press Take Off | All |
| B946 | 1 | Timing Cover (felt Seal) | F1 |
| B947 | 1 | Timing Cover (lip seal) | F2 |
| B947A | 5 | Oval Washer-T/Cover | All |
| B947B | 4 | Oval Washer-t/Cover | All |

| | |
|---|---|
| F153 | Spring Washer 1/4” |
| F154 | Spring Washer 5/16” |
| F155 | Spring Washer 3/8” |
| F156 | Spring Washer 7/16” |
| F163 | Plain Washer 1/4" |
| F164 | Plain Washer 5/16” |
| F204 | Plain Nut 5/16” UNF |
| F204L | Locking Nut 5/16” UNF |
| F205 | Plain Nut 3/8” UNF |
| F205L | Locking Nut 3/8” UNF |
| F451FS | Set Screw 1/4" UNF x 1/2" |
| F453FS | Set Screw 1/4" UNF x 3/4" |
| F503FS | Set Screw 5/16” UNF x 3/4" |
| F506FS | Set Screw 5/16” UNF x 1 1/8” |
| F553FS | Set Screw 3/8” UNF x 3/4" |

| | | | |
|---|---|---|---|
| G002G | 1 | Gasket Set-Bottom Eng. | F1+F2 to 66 (16AMW-16C) |
| G002K | 1 | Gasket Set-Bottom Eng. | F2 from 66 (16AA-CA) |
| G003D | 1 | Gasket-Sump(inc G002G) | F1+F2 to 66 (16AMW-16C) |
| G003E | 1 | Gasket-Sump(inc G002K) | F2 from 66 (16AA-CA) |
| G854 | 2 | Gasket-Sideplate (cork) | All |
| G905D | 2 | Cork Seal-Main Brg. Cap | All |
| G911D | 1 | Gasket-Timing Cover | All |
| G912D | 1 | Gasket - Front Mount Plate upto 1966 | |
| G912F | 1 | Gasket- Front Mount Plate from 1966 | |
| G913 | 1 | Gasket-Rear Mount plate | All |
| G947D | 1 | Felt Seal-Timing Cover | F1+Early F2 |
| G947E | 1 | Lipped Seal-Timing Cover | F2 |

| | | | |
|---|---|---|---|
| H005P | 1 | Engine Number Plate | All |
| H012 | 2 | River-Engine Plate | All |

| | | | |
|---|---|---|---|
| L192F | 1 | Cable-Engine Earth Strap | All |

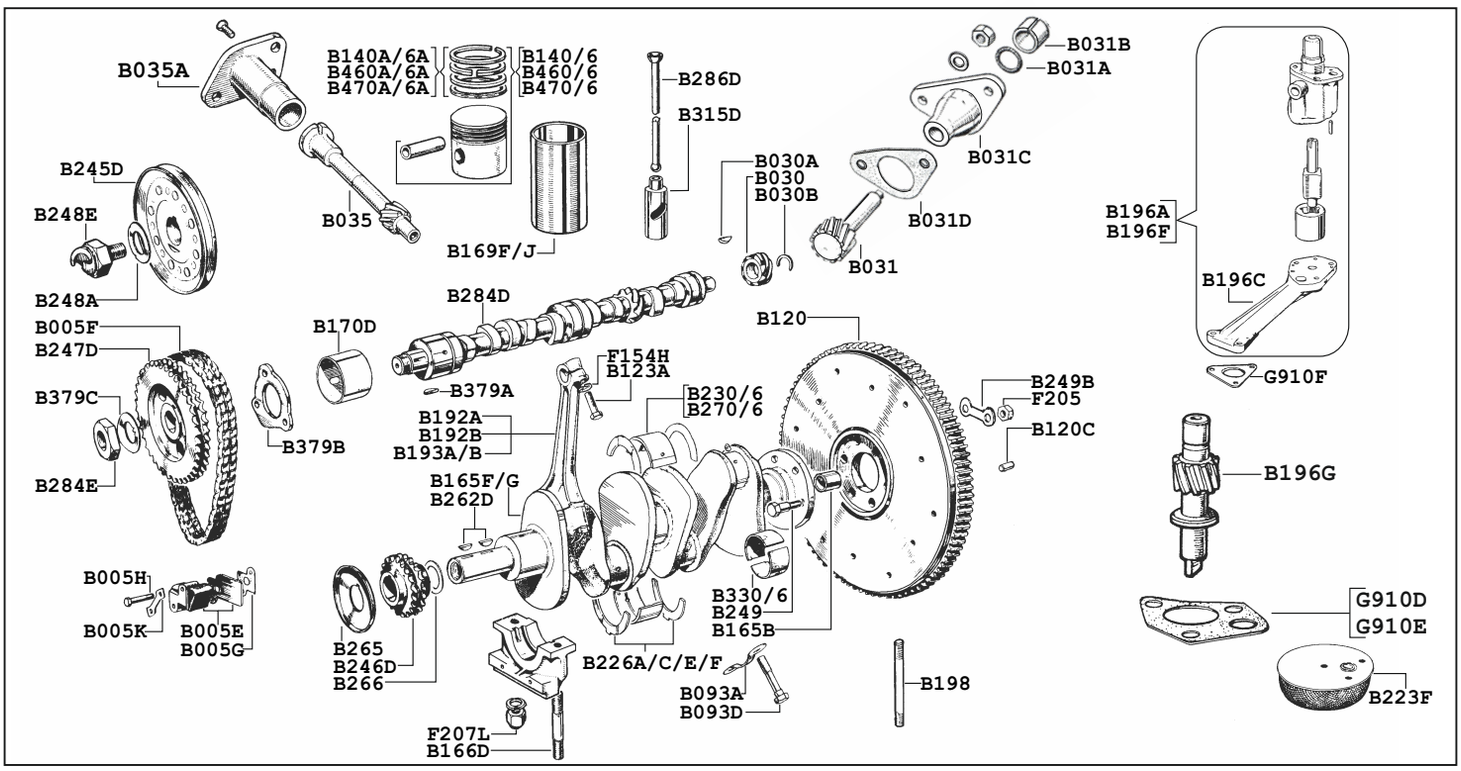


| | | | |
|---|---|---|---|
| B005E | 1 | Tensioner-T/Chain | All |
| B005F | 1 | Timing Chain | All |
| B005G | 1 | Gasket-Tensioner | All |
| B005H | 2 | Bolt-Tensioner to Block | All |
| B005K | 1 | Lock Tab-Timing Chain | All |
| B030 | 2 | Gear-Tacho Drive | R6/7 |
| B030A | 1 | Key-Tacho Gear | R6/7 |
| B030B | 1 | Circlip-Tacho Gear | R6/7 |
| B031 | 1 | Pinion Drive | R6/7 |
| B031A | 1 | Oil Seal-Pinion | R6/7 |
| B031B | 1 | Retainer-Pinion | R6/7 |
| B031C | 1 | Housing-Pinion | R6/7 |
| B031D | 1 | Gasket-Housing | R6/7 |
| B035 | 1 | Spindle-Distrib. Drive | All |
| B035A | 1 | Sleeve-Distrib. Mount | All |
| B093A | 4 | Lock Tab-Conrod | All |
| B093D | 4 | Bolt-Conrod Big End Cap | All |
| B120 | 1 | Ring Gear-(Manual) | All |
| B120C | 2 | Dowel Pin-Flywheel | All |
| B123A | 4 | Pinch Bolt-Conrod | All |
| B140 | 1 | Piston Set STD 8:3:1 | A5/MO5/MG3/R6/W15 |
| B140A | 1 | Ring Set STD 8:3:1 | A5/MO5/MG3/R6/W15 |
| B141 | 1 | Piston Set +010 8:3:1 | A5/MO5/MG3/R6/W15 |
| B141A | 1 | Ring Set+010 8:3:1 | A5/MO5/MG3/R6/W15 |
| B142 | 1 | Piston Set+020 8:3:1 | A5/MO5/MG3/R6/W15 |
| B142A | 1 | Ring Set+020 8:3:1 | A5/MO5/MG3/R6/W15 |
| B143 | 1 | Piston Set+030 8:3:1 | A5/MO5/MG3/R6/W15 |
| B143A | 1 | Ring Set+030 8:3:1 | A5/MO5/MG3/R6/W15 |
| B144 | 1 | Piston Set+040 8:3:1 | A5/MO5/MG3/R6/W15 |
| B144A | 1 | Ring Set+040 8:3:1 | A5/MO5/MG3/R6/W15 |
| B145 | 1 | Piston Set+050 8:3:1 | A5/MO5/MG3/R6/W15 |
| B145A | 1 | Ring Set+050 8:3:1 | A5/MO5/MG3/R6/W15 |
| B146 | 1 | Piston Set+060 8:3:1 | A5/MO5/MG3/R6/W15 |
| B146A | 1 | Ring Set+060 8:3:1 | A5/MO5/MG3/R6/W15 |
| B165B | 1 | Spigot Bush-Crankshaft | All |
| B165F | 1 | Crankshaft & Bearings | A5/MO5/MG3/R6/W15 |
| B165G | 1 | Crankshaft & Bearings | A6/MO6/MG4/R7/W16 |
| B166D | 6 | Stud-Main Bearing Cap | All |
| B169F | 1 | Liner Set-Piston | A5/MO5/MG3/R6/W15 |
| B169J | 1 | Liner Set-Piston | A6/MO6/MG4/R7/W16 |
| B170D | 1 | Bearing Set-Camshaft | All |
| B192A | 2 | Conrod 1 & 3 | A5/MO5/MG3/R6/W15 |
| B192B | 2 | Conrod 2 & 4 | A5/MO5/MG3/R6/W15 |
| B193A | 2 | Conrod 1 & 3 | A6/MO6/MG4/R7/W16 |
| B193B | 2 | Conrod 2 & 4 | A6/MO6/MG4/R7/W16 |
| B196A | 1 | Oil Pump Assy. | All to 1966 |
| B196C | 1 | Cover-Oil Pump Base | All to 1966 |
| B196F | 1 | Oil Pump Assy | All from 1966 |
| B196G | 1 | Drive Shaft+Gear-O/Pmp | All |
| B198 | 3 | Stud-Oil Pump to Engine | All |
| B223F | 1 | Oil Strainer Assy. | All |
| B226A | | Thrust Washer Set STD | All |
| B226C | | Thrust Washer Set 005 | All |
| B226E | | Thrust Washer Set 010 | All |
| B226E | | Thrust Washer Set 0025 | All |
| B230 | 1 | Main Bearing Set STD | A5/MO5/MG3/R6/W15 |
| B231 | 1 | Main Bearing Set +010 | A5/MO5/MG3/R6/W15 |
| B232 | 1 | Main Bearing Set +020 | A5/MO5/MG3/R6/W15 |
| B233 | 1 | Main Bearing Set +030 | A5/MO5/MG3/R6/W15 |
| B234 | 1 | Main Bearing Set +040 | A5/MO5/MG3/R6/W15 |
| B235 | 1 | Main Bearing Set +050 | A5/MO5/MG3/R6/W15 |
| B236 | 1 | Main Bearing Set +060 | A5/MO5/MG3/R6/W15 |
| B245D | 1 | Pulley-Crankshaft | All |
| B246D | 1 | Sprocket-Crankshaft | All |
| B247D | 1 | Sprocket-Camshaft | All |
| B248A | 1 | Lock washer-Starter Dog. | All |
| B248E | 1 | Starter Dognut | All |
| B249 | 6 | Bolt-Flywheel to Crank | All |
| B249B | 3 | Lock tab-Flywheel | All |
| B265 | 1 | Oil Thrower-Crankshaft | All |
| B262D | 2 | Woodruffe Key | All |
| B266 | 1 | Shim-Sprocket Alignment | All |
| B270 | 1 | Main Bearing Set-STD | A6/MO6/MG4/R7/W16 |
| B270 | 1 | Main Bearing Set STD | A6/MO6/MG4/R7/W16 |
| B271 | 1 | Main Bearing Set +010 | A6/MO6/MG4/R7/W16 |
| B272 | 1 | Main Bearing Set +020 | A6/MO6/MG4/R7/W16 |
| B273 | 1 | Main Bearing Set +030 | A6/MO6/MG4/R7/W16 |
| B274 | 1 | Main Bearing Set +040 | A6/MO6/MG4/R7/W16 |
| B275 | 1 | Main Bearing Set +050 | A6/MO6/MG4/R7/W16 |
| B276 | 1 | Main Bearing Set +060 | A6/MO6/MG4/R7/W16 |
| B284D | 1 | Camshaft-Improved | All |
| B284E | 1 | Lock washer-Camshaft | All |
| B286D | 8 | Pushrod | All |
| B315D | 8 | Cam Follower | All |
| B330 | 1 | Conrod Bearings STD | All |
| B331 | 1 | Conrod Bearings +010 | All |
| B332 | 1 | Conrod Bearings +020 | All |
| B333 | 1 | Conrod Bearings +030 | All |

| | | | |
|---|---|---|---|
| B334 | 1 | Conrod Bearings +040 | All |
| B335 | 1 | Conrod Bearings +050 | All |
| B336 | 1 | Conrod Bearings +060 | All |
| B379A | 1 | Key-Camshaft | All |
| B379B | 1 | Plate-Camshaft Retaining | All |
| B379C | 1 | Nut-Camshaft Front | All |
| B460 | 1 | Piston Set STD 8:9:1 | MG4/R7 |
| B460A | 1 | Ring Set STD 8:9:1 | MG4/R7 |
| B461 | 1 | Piston Set +010 8:9:1 | MG4/R7 |
| B461A | 1 | Ring Set +010 8:9:1 | MG4/R7 |
| B462 | 1 | Piston Set +020 8:9:1 | MG4/R7 |
| B462A | 1 | Ring Set +020 8:9:1 | MG4/R7 |
| B463 | 1 | Piston Set +030 8:9:1 | MG4/R7 |
| B463A | 1 | Ring Set +030 8:9:1 | MG4/R7 |
| B464 | 1 | Piston Set +040 8:9:1 | MG4/R7 |
| B464A | 1 | Ring Set +040 8:9:1 | MG4/R7 |
| B465 | 1 | Piston Set +050 8:9:1 | MG4/R7 |
| B465A | 1 | Ring Set +050 8:9:1 | MG4/R7 |
| B466 | 1 | Piston Set +060 8:9:1 | MG4/R7 |
| B466A | 1 | Ring Set +060 8:9:1 | MG4/R7 |

| | | | |
|---|---|---|---|
| B470 | 1 | Piston Set STD 8:3:1 | A6/MO6/W16 |
| B470A | 1 | Ring Set STD 8:3:1 | A6/MO6/W16 |
| B471 | 1 | Piston Set +010 8:3:1 | A6/MO6/W16 |
| B471A | 1 | Ring Set +010 8:3:1 | A6/MO6/W16 |
| B472 | 1 | Piston Se +020 8:3:1 | A6/MO6/W16 |
| B472A | 1 | Ring Set +020 8:3:1 | A6/MO6/W16 |
| B473 | 1 | Piston Set +030 8:3:1 | A6/MO6/W16 |
| B473A | 1 | Ring Set +030 8:3:1 | A6/MO6/W16 |
| B474 | 1 | Piston Set +040 8:3:1 | A6/MO6/W16 |
| B474A | 1 | Ring Set +040 8:3:1 | A6/MO6/W16 |
| B475 | 1 | Piston Set +050 8:3:1 | A6/MO6/W16 |
| B475A | 1 | Ring Set +050 8:3:1 | A6/MO6/W16 |
| B476 | 1 | Piston Set +060 8:3:1 | A6/MO6/W16 |
| B476A | 1 | Ring Set +060 8:3:1 | A6/MO6/W16 |
| F205 | | Plain Nut 3/8" UNF | |
| G910D | 1 | Gasket O/Pump to Block | F1 + F2 to 1966 |
| G910E | 1 | Gasket O/Pump to Block | F2 from 1966 |
| G910F | 1 | Gasket O/Strainer | All |

# Technical Data

### Tyre Size/Pressures

5.90 x 14 Front 23lb/Rear 25 lb

165 x 14 Front 24lb Rear 26lb

### Capacities

| | |
|---|---|
| Engine Sump | 7 ½ imperial pints (4.25 Litres) |
| Manual Gearbox | 4 ½ imperial pints (2.56 Litres) |
| Automatic (*includes convertor*) | 11 imperial pints (6.2 Litres) |
| Rear Axle | 2 ¼ imperial pints (1.28 Litres) |
| Cooling System | |
| * 1500cc | 12 ½ imperial pints (7.1 litres) |
| * 1622cc | 9 ½ imperial Pints (5.4 Litres) |
| Fuel Tank | 10 imperial gallons (45.4 litres) |

### Torque Settings

*Engine*

| | |
|---|---|
| Main bearing nuts | 70 lb. ft. (9.7 kg. m.) |
| Big-end bolts | 40 lb. ft. (5.5 kg. m.) |
| Gudgeon pin clamp bolt | 25 lb. ft. (3.4 kg. m.) |
| Cylinder head nuts | 40 lb. ft. (5.5 kg. m.) |
| Rocker bracket nuts | 25 lb. ft. (3.4 kg. m.) |
| Oil pump to crankcase | 14 lb. ft. (1.9 kg. m.) |
| Oil Filter centre-bolt | 15 lb. ft. (2.1 kg. m.) |
| Sump to crankcase | 6 lb. ft. (0.8 kg. m.) |
| Cylinder side cover screws | 2 lb. ft. (0.28 kg. m.) |
| 2nd-type-deep pressed cover | 5 lb. ft. (0.7 kg. m.) |
| Timing cover - 1/4 in. screws | 6 lb. ft. (0.8 kg. m.) |
| Timing cover - 5/16 in. screws | 14 lb. ft. (1.9 kg. m.) |
| Rear plate - 5/16 in. screws | 20 lb. ft. (2.8 kg. m.) |
| Rear plate - 3/8 in. screws | 30 lb. ft. (4.1 kg. m.) |
| Flywheel set screws | 40 lb. ft. (5.5 kg. m.) |
| Clutch to flywheel | 25 lb. ft. (3.4 kg. m.) |
| Water pump to cylinder block | 17 lb. ft. (2.3 kg. m.) |
| Water outlet elbow nuts | 8 lb. ft. (1.1 kg. m.) |
| Rocker cover nuts | 4 lb. ft. (0.56 kg. m.) |
| Manifold nuts | 15 lb. ft. (2.1 kg. m.) |
| Carburettor stud nuts | 2 lb. ft. (0.2 kg. m.) |
| Distributor clamp bolt (nut trapped) | 4.2 lb. ft. (0.57 kg. m.) |
| Distributor clamp nut (bolt trapped) | 2.5 lb. ft. (0.35 kg. m.) |
| Sparking plugs | 30 lb. ft. (4.1 kg. m.) |

*Rear Axle*

| | |
|---|---|
| Crown wheel to diff. carrier | 55 to 60 lb. ft. (7.6 to 8.3 kg. m.) |
| Differential bearing cap | 60 to 65 lb. ft. (8.3 to 8.9 kg. m.) |
| Pinion bearing nut | 135 to 140 lb. ft. (18.6 to 19.3 kg. m.) |
| Rear brake adjuster nuts | 5 to 7 lb. ft. (0.69 to 0.97 kg. m.) |
| Hub bearing retaining nut | 180 lb. ft. (24.8 kg. m.) |

*Rear Suspension*

| | |
|---|---|
| Shock absorber bolts | 30 lb. ft. (4.1 kg. m.) |

*Front suspension*

| | |
|---|---|
| Mounting nuts | 40 to 45 lb. ft. (5.5 to 6.2 kg. m.) |

*Steering*

| | |
|---|---|
| Steering-wheel nut | 41 lb. ft. (5.76 kg. m.) |
| Steering Box rocker shaft + idler shaft nuts | 75 lb. ft. (10.4 kg. m.) |
| Steering Box side cover set screws | 12 to 15 lb. ft. (1.8 to 2.1 kg. m) |

*Road wheels*

| | |
|---|---|
| Road wheel nuts | 60 to 62.5 lb. ft. (8.3 to 8.6 kg. m.) |

### Ignition Settings

| | | | |
|---|---|---|---|
| Tappets Clearance | 0.15 cold (0.40 mm) | Contact Breaker Points | 0.14 to 0.16 in (0.35 to 0.40 mm) |
| Spark Plug | 0.024 to 0.026 in (0.62 to 0.66 mm) | Static Ignition Timing | 8 degrees B.T.D.C. |

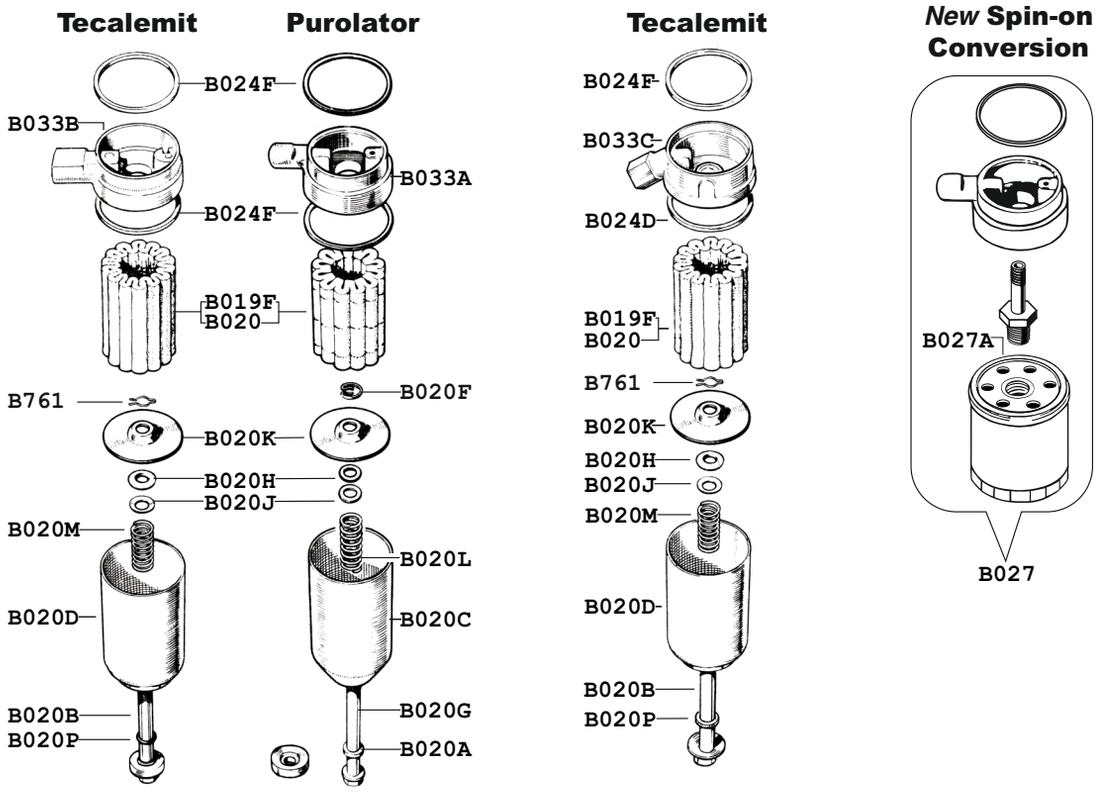


| | | | |
|---|---|---|---|
| B019F | 1 | Oil Filter - Felt (Origl.) | |
| B020 | 1 | Oil Filter – Paper (Repl.) | |
| B020A | 1 | Seal - Filter Bolt (Pur) | |
| B020B | 1 | Bolt - Oil Filter (Tec) | |
| B020C | 1 | Casing - Oil Filter (Pur) | |
| B020D | 1 | Casing - Oil Filter (Tec) | |
| B020F | 1 | Clip - Oil Filter Bolt (Tec) | |
| B020G | 1 | Bolt - Oil Filter (Pur) | |
| B020H | 1 | Felt Washer - Oil Filter | |
| B020J | 1 | Steel Washer - Oil Filter | |
| B020K | 1 | Plate - Oil Filter | |
| B020L | 1 | Spring - Oil Filter (Pur) | |
| B020M | 1 | Spring - Oil Filter (Tec) | |
| B020P | 1 | Seal - Filter Bolt (Tec) | |
| B024D | 1 | Seal - Below Filter Head | Late F2 |
| B024F | 2/1 | Seal - Filter Head | |
| B027 | 1 | Spin-On Conversion Kit | } *Not suitable for* |
| B027A | 1 | Filter - Spin-On Conversion | } *use with B033C* |
| B033A | 1 | Head - Oil Filter (Pur) | F1 + Early F2 |
| B033B | 1 | Head - Oil Filter Str. (Tec) | F1 + Early F2 |
| B033C | 1 | Head - Oil Filter Ang. (Tec) | Late F2 |
| B034 | 1 | Adaptor - Oil Pipe | |
| B034A | 1 | Pipe - Filter/Block (over) | F1 + Early F2 |
| B034AD | 1 | Pipe - Filter/Block (over) | F1 + Early F2 |
| B034AF | 1 | Pipe - Filter/Block (under) | Late F2 |
| B034AG | 1 | Pipe - Filter/Block (under) | Steering Col. change |
| B034B | 1 | Banjo Bolt - Oil Pipe | |
| B034F | 1 | Adaptor - Oil Pipe | |
| B326A | 3 | Copper Washer | |
| B761 | 1 | Clip - Oil Filter Bolt (Pur) | |

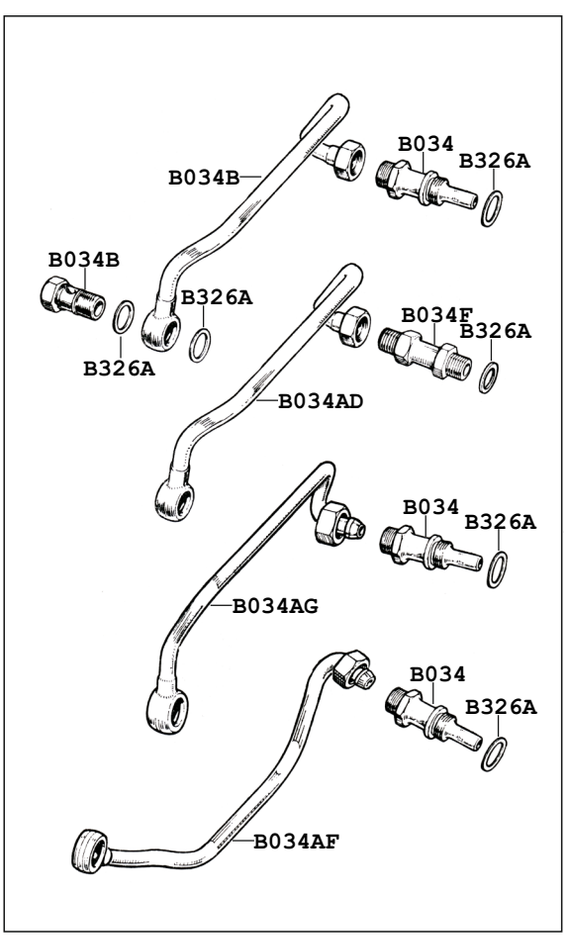

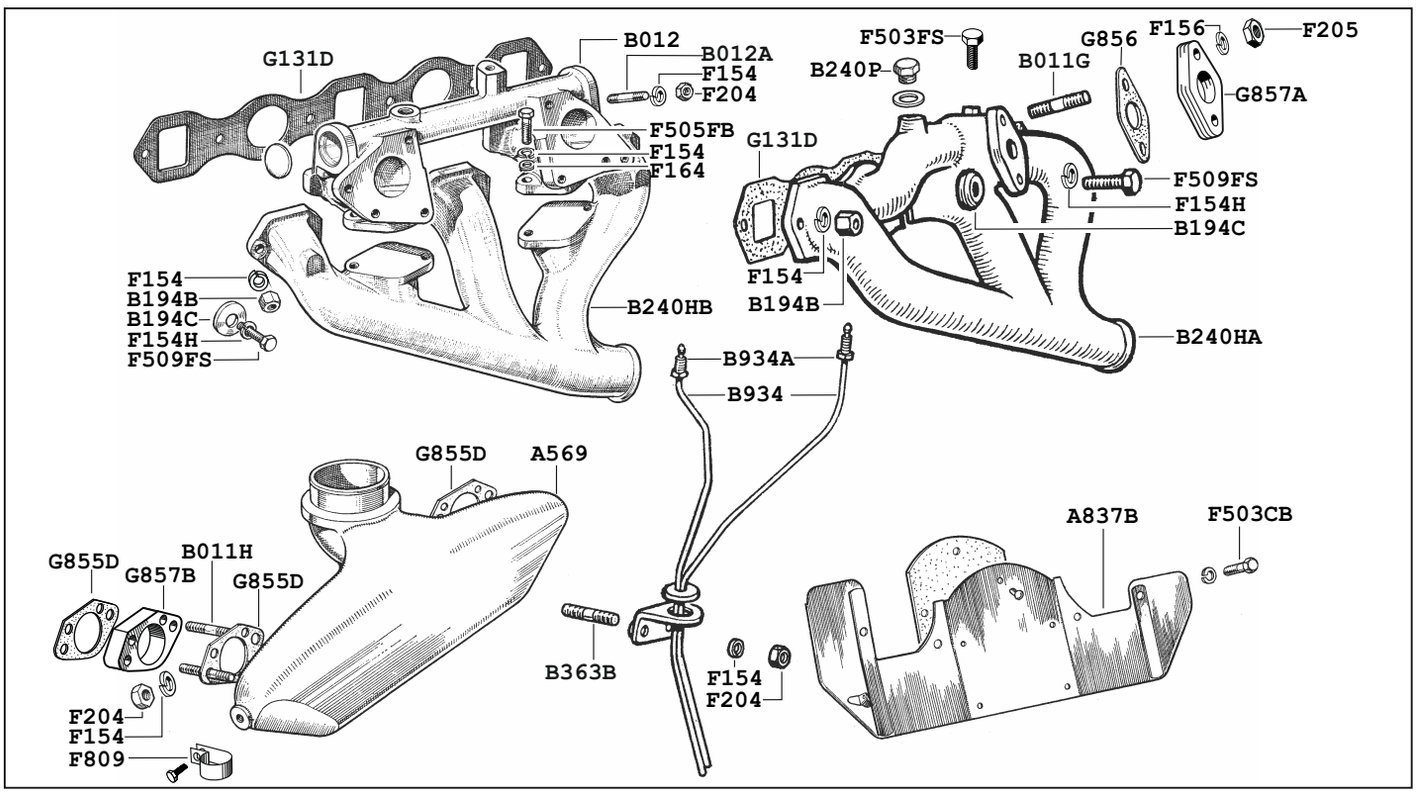


| | | | |
|---|---|---|---|
| A569 | 1 | Manifold-Air Cleaner | MG34/R67 |
| A837B | 1 | Heat Shield | MG34/R67 |
| B011H | 4 | Stud - Carb to Manifold | MG34/R67 |
| B012 | 1 | Manifold - Inlet | MG34/R67 |
| B012A | 4 | Stud - Carb to Inlet Manifold | MG34/R67 |
| B194B | 2 | Nut-Manifold | All |
| B194C | 4 | Clamp - Man to Head | All |
| B240HA | 1 | Manifold - Exhaust | A56/MO56/W1516 |
| B240HB | 1 | Manifold - Exhaust | MG34/R67 |
| B240P | 1 | Plug-Manifold | A6/MO6/W16 |
| B363B | 1 | Stud-Bracket | MG34/R67 |
| B934 | 2 | Drain Tube (less nut) | All |
| B934A | 2 | Tube Nut- Drain Tube | All |
| F154 | | Spring Washer 5/16" | |
| F154H | | Spring Washer 5/16" (heavy) | |
| F156 | | Spring Washer 7/16" | |
| F164 | | Plain Washer 5/16" | |
| F204 | | Plain Nut 5/16" UNF | |
| F205 | | Plain Nut 3/8" UNF | |
| F503CS | 4 | Set Screw 5/16" UNC x 3/4" | |
| F503FS | | Set Screw 5/16" UNF x 3/4" | |
| F505FB | | Bolt 5/16" UNF x 1" | |
| F509FS | | Set Screw 5/16" UNF x 1 1/2" | |
| F809 | 1 | 'P' Clip | MG34/R67 |
| G855D | 6 | Joint Gasket | MG34/R67 |
| G856 | 2 | Joint Gasket | A56/MO56/W1516 |
| G857A | 1 | Spacer - Manifold to Carb | A56/MO56/W1516 |
| G857B | 2 | Spacer - Manifold to Shield | MG34/R67 |

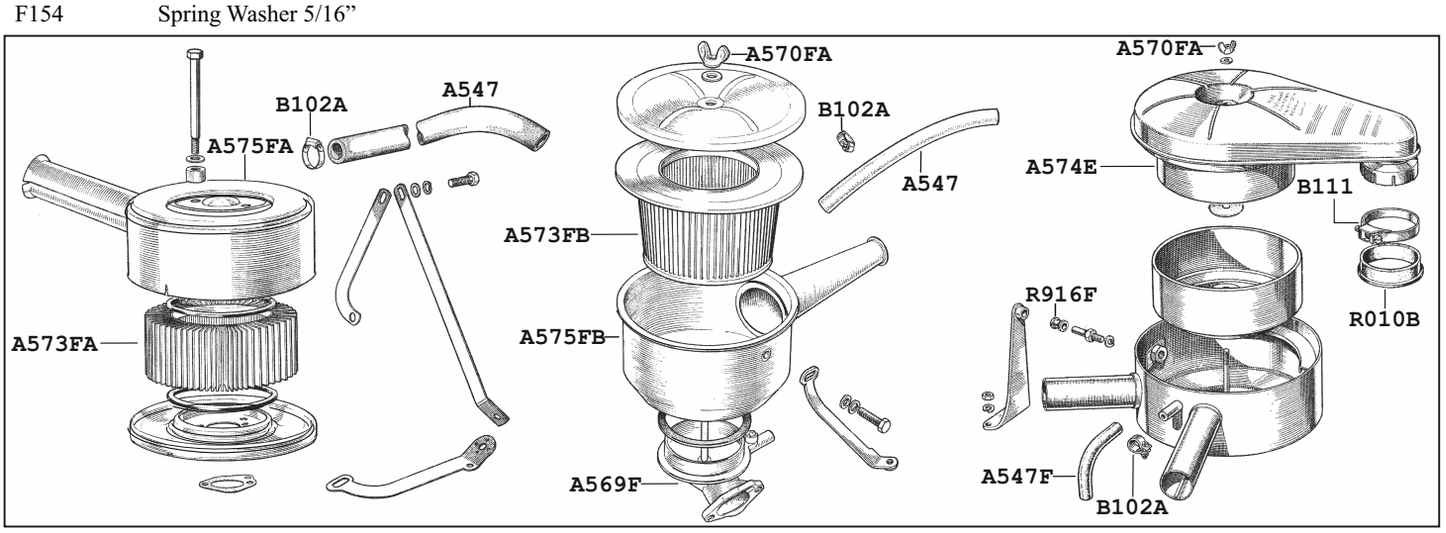


| | | | |
|---|---|---|---|
| A547 | 1 | Hose to Rocker Cover | A56/MO56/W1516 |
| A547F | 1 | Hose to Rocker Cover | MG34/R67 |
| A569F | 1 | Housing - Coopers | A6/MO6/W16 (after 1962) |
| A570FA | 1 | Wing Nut | Coopers + MG3/4 |
| A573FA | 1 | Air Filter - AC Delco | A56/MO56/W1516 (up to 1962) |
| A573FB | 1 | Air Filter - Coopers | A6/MO6/W16 (after 1962) |
| A574E | 1 | Oil Bath Air Cleaner | MG34/R67 |
| A575FA | 1 | Air Cleaner - AC Delco | A56/MO56/W1516 (up to 1962) |
| A575FB | 1 | Air Cleaner - Coopers | A6/MO6/W16 (after 1962) |
| B102A | 2 | Hose Clip | All |
| B111 | 1 | Clip | MG34/R67 |
| R010B | 1 | Grommet | MG34/R67 |
| R916F | 1 | Mount Rubber | MG34/R67 |

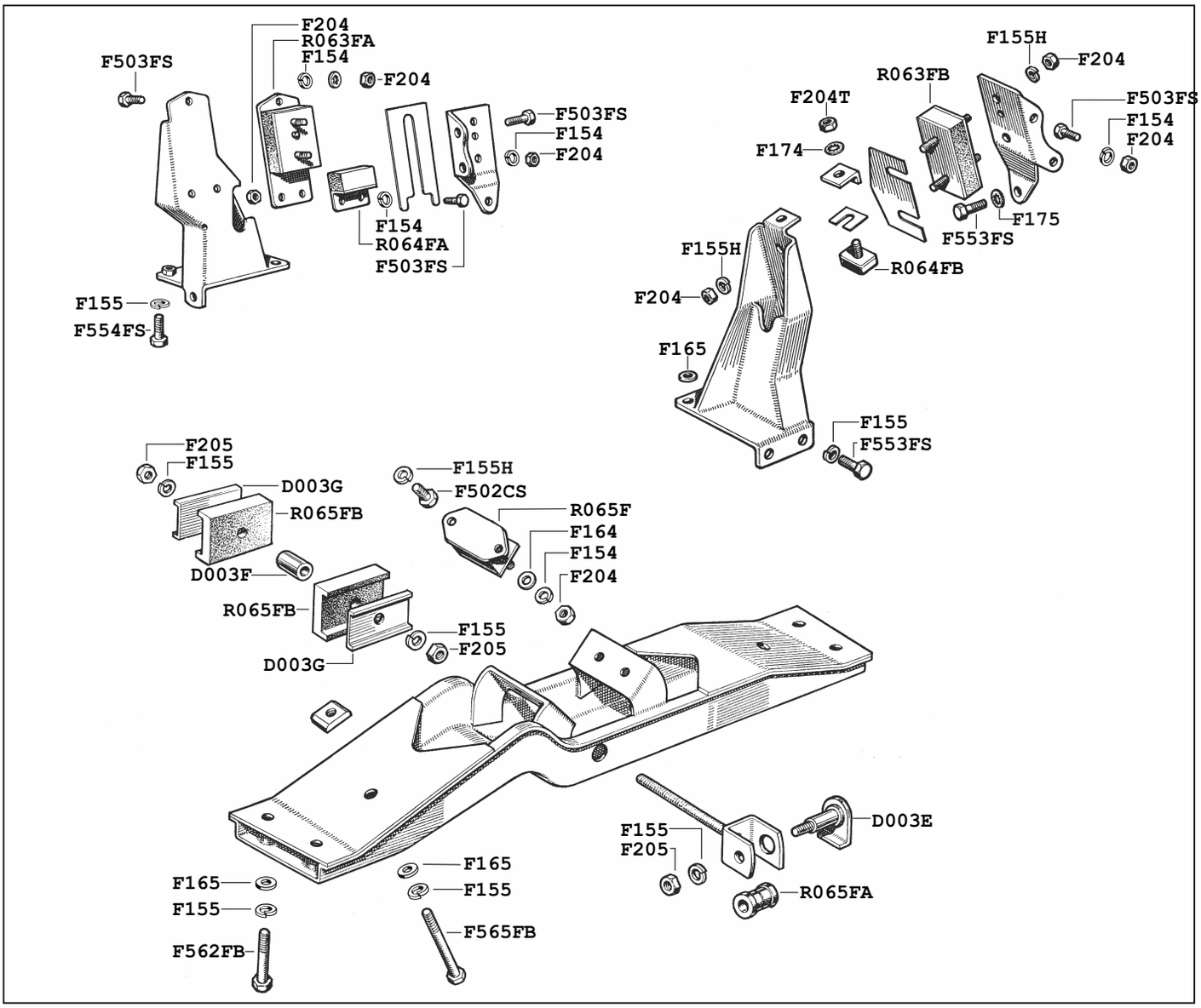


| | | | | | | |
|---|---|---|---|---|---|---|
| D003E | 1 | Pin - Gearbox Steady | All | F502CS | Set Screw 5/16" x 5/8" UNC | |
| D003F | 1 | Distance Spacer | All | F503FS | Set Screw 5/16" x 3/4" UNF | |
| D003G | 2 | Buffer Plate | All | F553FS | Set Screw 3/8" x 3/4" UNF | |
| | | | | F554FS | Set Screw 3/8" x 7/8" UNF | |
| F154 | | Spring Washer 3/8" | | F562FB | Bolt 3/8" x 1 7/8" UNF | |
| F155 | | Spring Washer 5/16" | | F565FB | Bolt 3/8" x 2 1/2" UNF | |
| F155H | | Spring Washer 5/16" (HD) | | | | |
| F164 | | Plain Washer 3/8" | | R063FA | 2 Engine Mount | A5/MO3/MG3/R6/W15 |
| F165 | | Plain Washer 5/16" | | R063FB | 2 Engine Mount | A6/MO6/MG4/R7/W16 |
| F174 | | Internal Star Washer 5/16" | | R064FA | 2 Buffer | A5/MO3/MG3/R6/W15 |
| F175 | | Internal Star Washer 3/8" | | R064FB | 2 Buffer | A6/MO6/MG4/R7/W16 |
| F204 | | Plain Nut 5/16" UNF | | R065F | 2 Gearbox Mount | All |
| F204T | | Thin Nut 5/16" UNF | | R065FA | 2 Bush-Fork End | All |
| F205 | | Plain Nut 3/8" UNF | | R065FB | 2 Buffer Pad | All |

# Exhausts

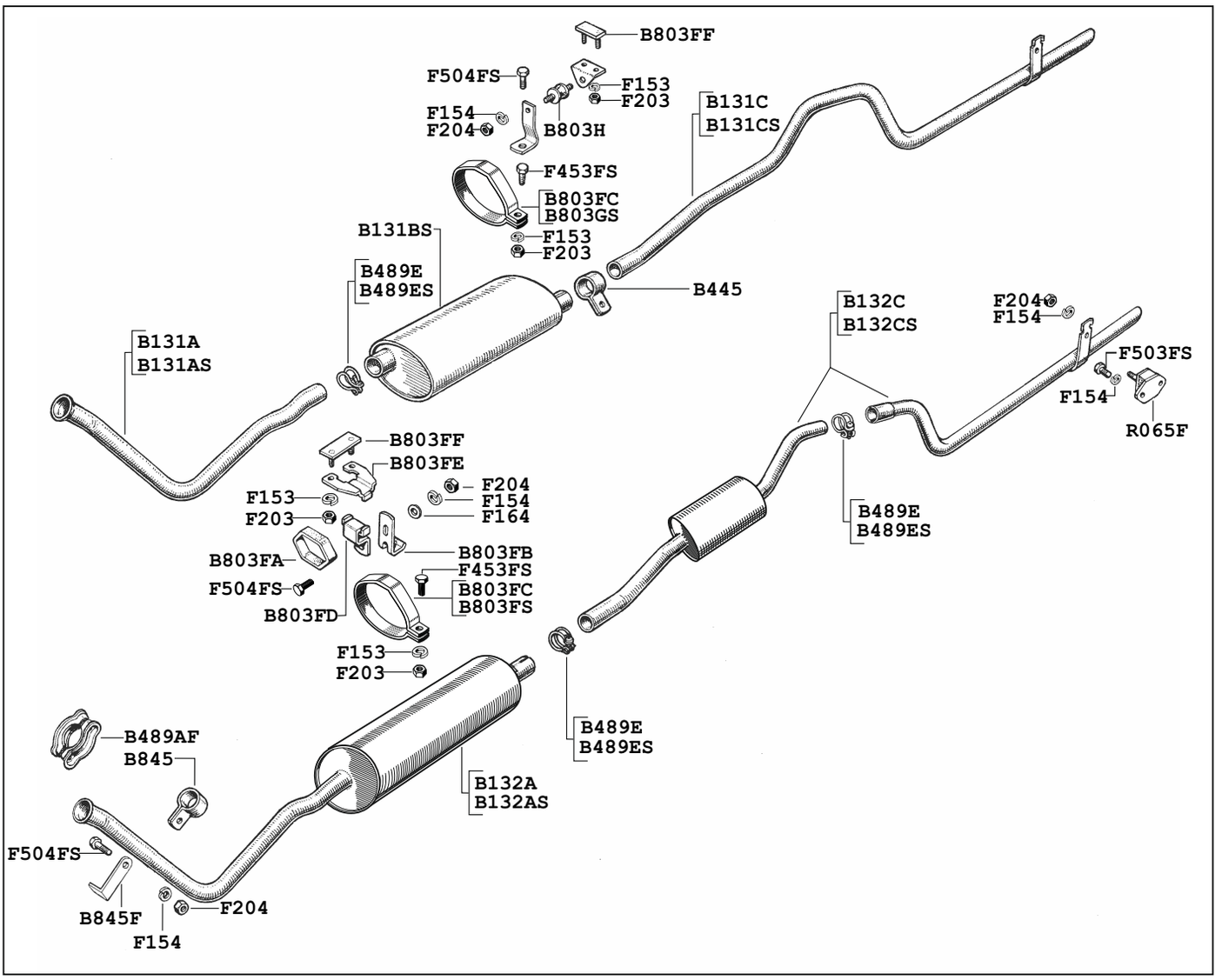


| | | | | | | | | | |
|---|---|---|---|---|---|---|---|---|---|
| B131 | 1 | Exhaust System (Stainless) | F1 | B803FD | 1 | Retainer-Mount to Link | | | |
| B131A | 1 | Front Pipe + Silencer (Mild Steel) | F1 | B803FE | 1 | Bracket-Plate to Rubber | | | |
| B131AS | 1 | Front Pipe (Stainless) | F1 | B803FF | 1 | Plate-Bracket to Floor | | | |
| B131BS | 1 | Silencer (Stainless) | F1 | B803FS | 1 | Strap-Silencer (Stainless) | F2 | | |
| B131C | 1 | Tailpipe (Mild Steel) | F1 | B803GS | 1 | Strap-Silencer (Stainless) | F1 | | |
| B131CS | 1 | Tailpipe (Stainless) | F1 | B803H | 1 | Mount-Centre (early!) | F1 | | |
| B131KT1 | 1 | Exhaust Mounting Kit (Stainless) | F1 | B845 | 1 | Clamp Bracket-Frt. Pipe | | | |
| B132 | 1 | Exhaust System (Stainless) | F2 | B845F | 1 | Bracket-Clamp to Chassis | | | |
| B132A | 1 | Front Pipe (Mild Steel) | F2 | | | | | | |
| B132AS | 1 | Front Pipe (Stainless) | F2 | F153 | | Spring Washer 1/4" | | | |
| B132C | 1 | Tailpipe (Mild Steel) | F2 | F154 | | Spring Washer 5/16” | | | |
| B132CS | 1 | Tailpipe (Stainless) | F2 | F164 | | Plain Washer 5/16” | | | |
| B132KT | 1 | Exhaust Mounting Kit (Mild Steel) | F2 | F203 | | Plain Nut 1/4" UNF | | | |
| B132KT1 | 1 | Exhaust Mounting Kit (Stainless) | F2 | F204 | | Plain Nut 5/16” UNF | | | |
| B489AF | 1 | Clamp Assembly (Front) | | F453FS | | Set Screw 1/4" x 3/4" UNF | | | |
| B489E | 1 | Clamp-Joining (Mild/Steel) | | F503FS | | Set Screw 5/16” x 3/4" UNF | | | |
| B489ES | 1 | Clamp- (Stainless) | | F504FS | | Set Screw 5/16” x 7/8” UNF | | | |
| B803FA | 1 | Rubber Mounting-Silencer | | | | | | | |
| B803FB | 1 | Link-Silencer Support | | R065F | 1 | Mounting Rubber - Rear | | | |
| B803FC | 1 | Strap-Silencer (mild Steel) | | | | | | | |

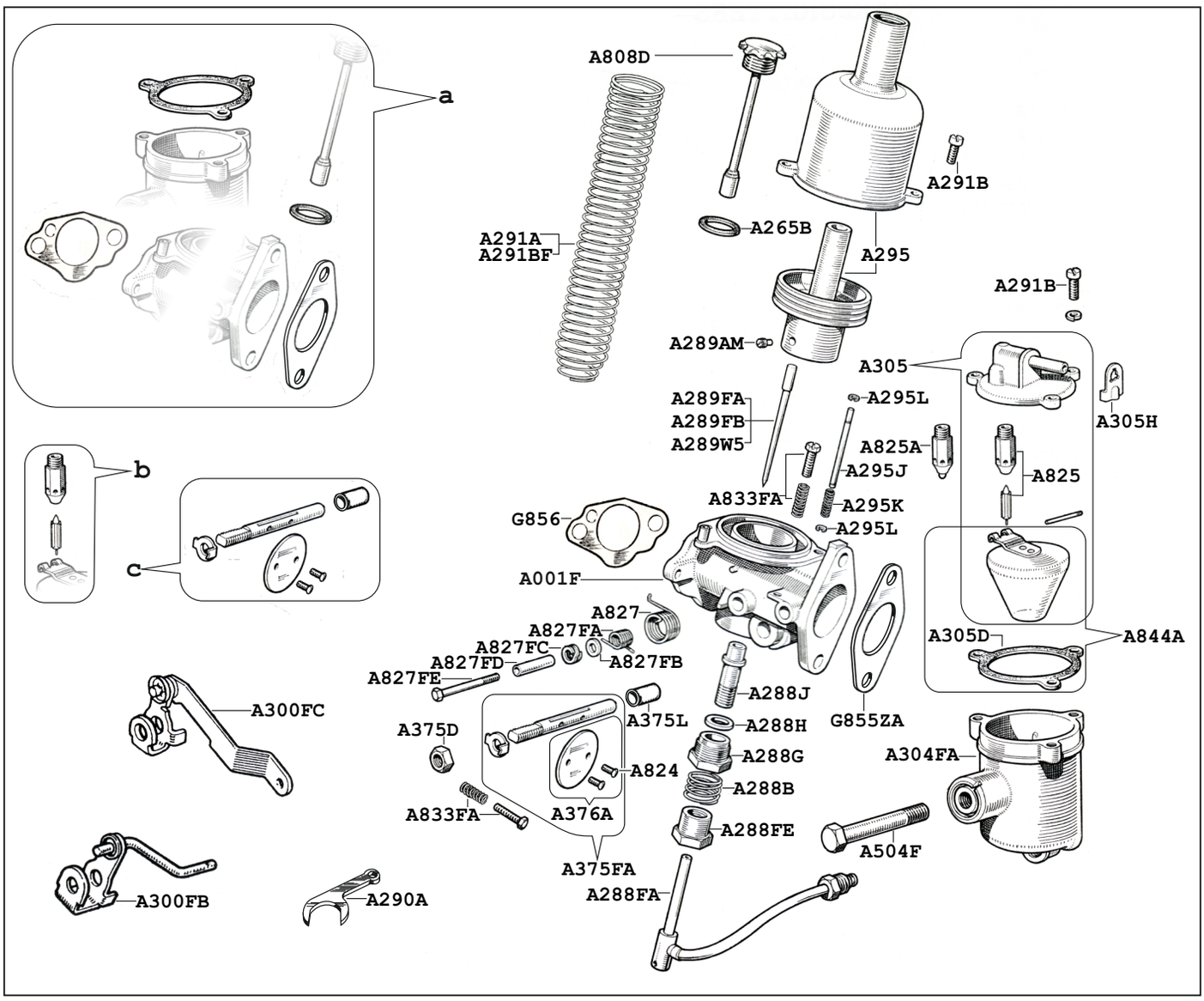


| | | | |
|---|---|---|---|
| A001F | 1 | Carburettor Body (Used) | |
| A005 | 1 | Rebuild Kit (**a** + **b** + **c**) | |
| A005A | 1 | Service Kit (**a** + **b**) | |
| A005B | 1 | Gasket Kit (**a**) | |
| A265B | 1 | Washer - Dashpot Top (**a**) | |
| A288B | 1 | Spring - Carb Jet Adjusting Nut | |
| A288FA | 1 | Jet (**b**) | |
| A288FE | 1 | Nut - Jet Adjusting | |
| A288G | 1 | Nut - Jet Locking | |
| A288H | 1 | Washer - Brass Jet Bearing | |
| A288J | 1 | Jet Bearing | |
| A289AM | 1 | Screw - Needle Lock | |
| A289FA | 1 | Carb Needle (GY) STD | A5 |
| A289FB | 1 | Carb Needle (GX) STD | A6/MO6/W16 |
| A289W5 | 1 | Carb Needle STD | MO5/W15 |
| A290A | 1 | Spanner - Jet Adjusting | |
| A291A | 1 | Spring - Piston | A5/MO5/W15 |
| A291B | 2 | Screw - Piston Chamber | |
| A291BF | 1 | Spring - Piston | A6/MO6/W16 |
| A295 | 1 | Chamber & Piston (Used) | |
| A295J | 1 | Pin - Piston Lifting | |
| A295K | 1 | Spring - Piston Lifting | |
| A295L | 1 | Circlip - Piston Lift Pin | |
| A298RX | 1 | Carburettor - Recon. Exchange | *Please state model* |
| A300FB | 1 | Pick Up Lever - Wire Type | |
| A300FC | 1 | Pick Up Lever - Flat Type | |

| | | |
|---|---|---|
| A304FA | 1 | Float Chamber |
| A305 | 1 | Lid + Float Assembly |
| A305D | 1 | Gasket - Float Chamber (**a**) |
| A305H | 1 | Baffle Plate - Float Lid |
| A375D | 1 | Nut - Spindle |
| A375FA | 1 | Spindle Kit (c) |
| A375L | 1 | Bush - Casting Repair (**c**) |
| A376A | 1 | Throttle Disc + Screws (**c**) |
| A385F | 1 | Lever - Throttle Return |
| A504F | 1 | Bolt - Float Chamber |
| A808D | 1 | Carb Damper |
| A824 | 2 | Screw - Throttle Disc |
| A825 | 1 | Needle Jet + Valve Seat (**b**) |
| A825A | 1 | Needle + Seat - Improved |
| A827 | 1 | Spring - Pick Up Lever |
| A827FA | 1 | Spring - Cam Lever |
| A827FB | 1 | Washer - Cam Lever |
| A827FC | 1 | Washer - Spring |
| A827FD | 1 | Tube - Pivot Bolt |
| A827FE | 1 | Pivot Bolt |
| A833FA | 1 | Screw + Spring - Throttle Stop |
| A844A | 1 | Float |
| | | |
| G855ZA | 1 | Gasket - To Filter (**a**) |
| G856 | 1 | Gasket - To Manifold (**a**) |

# HD4 Carburettor (MG/Riley)

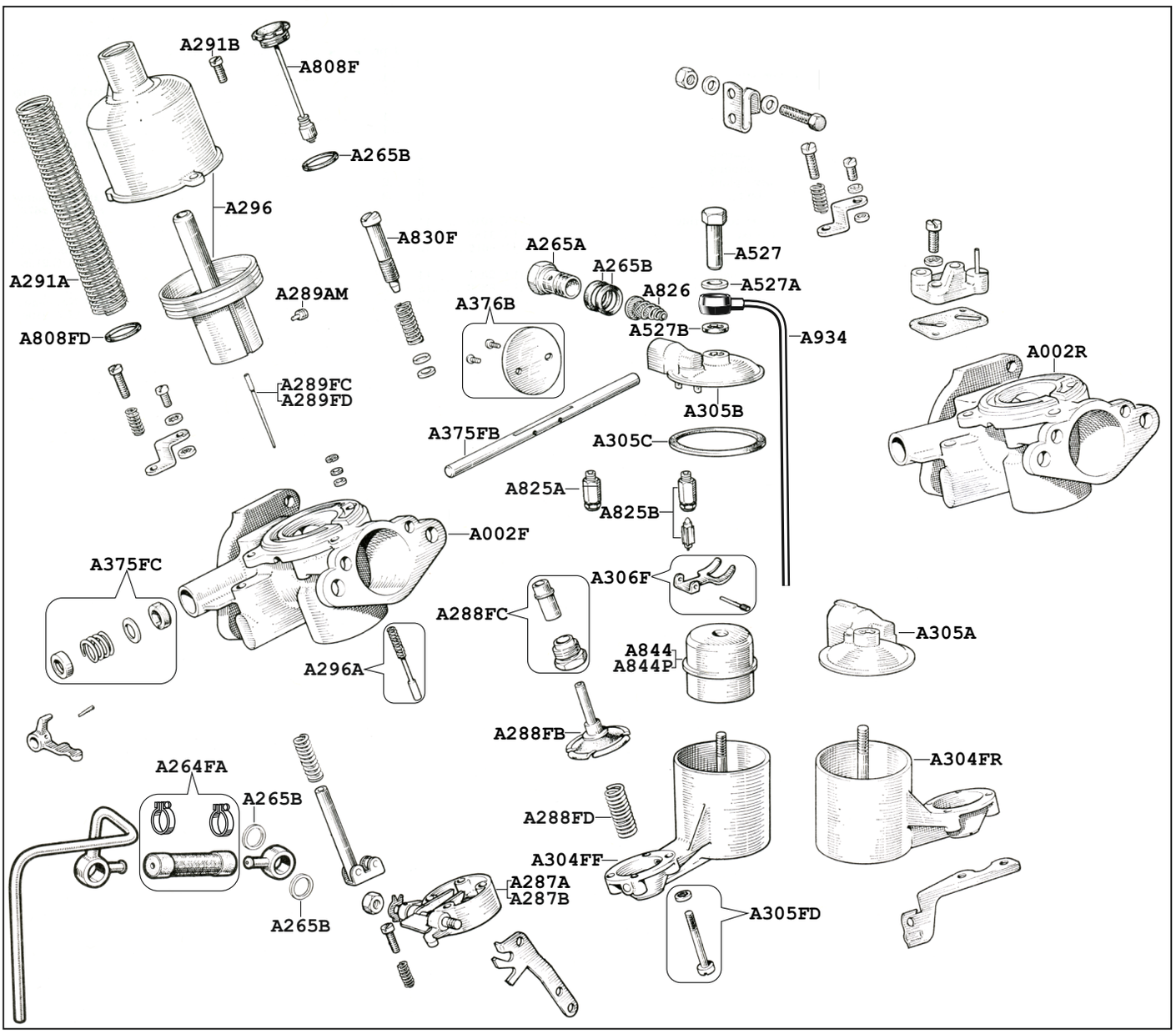


| | | | |
|---|---|---|---|
| A002F | 1 | Body - Front | |
| A002R | 1 | Body - Rear | |
| A006 | 2 | Rebuild Kit | } Includes A006A+A006B |
| A006A | 2 | Service Kit | } Includes A006B |
| A006B | 2 | Gasket Set | |
| A020 | | Carb Sync Tool | |
| A021 | | Colortune Tool | |
| A264FA | 1 | Flexi Hose - Carb to Carb | |
| A265A | 2 | Banjo Bolt | |
| A265B | 6 | Fibre Washer | |
| A287A | 1 | Jet Housing Assembly | MG3/R6 |
| A287B | 1 | Jet Housing Assembly | MG4/R7 |
| A288FB | 2 | Jet | |
| A288FC | 2 | Bearing Kit - Jet | |
| A288FD | 2 | Spring – Jet | |
| A289AM | 2 | Screw - Needle Lock | |
| A289FC | 2 | Needle (FU) Std | MG3/R6 |
| A289FD | 2 | Needle (HB) Std | MG4/R7 |
| A291A | 2 | Spring - Piston | |
| A291B | 6 | Screw - Chamber | |
| A296 | 2 | Chamber & Piston | |
| A296A | 2 | Lift Pin Kit | |
| A298SX | 1 | Pair Carbs - Exchange | *Please state model* |
| A304FF | 1 | Float chamber - Front | |

| | | |
|---|---|---|
| A304FR | 1 | Float Chamber - Rear |
| A305A | 1 | Lid - Rear Float Chamber |
| A305B | 1 | Lid - Front Float Chamber |
| A305C | 2 | Gasket - Float Chamber |
| A305FD | 2 | Mount Kit - Float Chamber |
| A306F | 2 | Lever & Pin |
| A375FB | 2 | Spindle Kit |
| A375FC | 2 | Seal Kit – Spindle |
| A375M | 4 | Bush - Casting Repair |
| A376B | 2 | Throttle Disc |
| A527 | 2 | Nut - Float Chamber |
| A527A | 2 | Alloy Washer - Float Chamber |
| A527B | 2 | Fibre Washer - Float Chamber |
| A808F | 2 | Cap & Damper |
| A808FD | 2 | Thrust Washer |
| A824 | 4 | Screw - Throttle Disc |
| A825A | 2 | Needle & Seat (Improved) |
| A825B | 2 | Needle & Jet - Valve Seat |
| A826 | 2 | Filter & Spring |
| A830F | 2 | Volume Control Screw Kit |
| A844 | 2 | Brass Float |
| A844P | 2 | Plastic Float (improved) |
| A934 | 2 | Overflow Pipe |

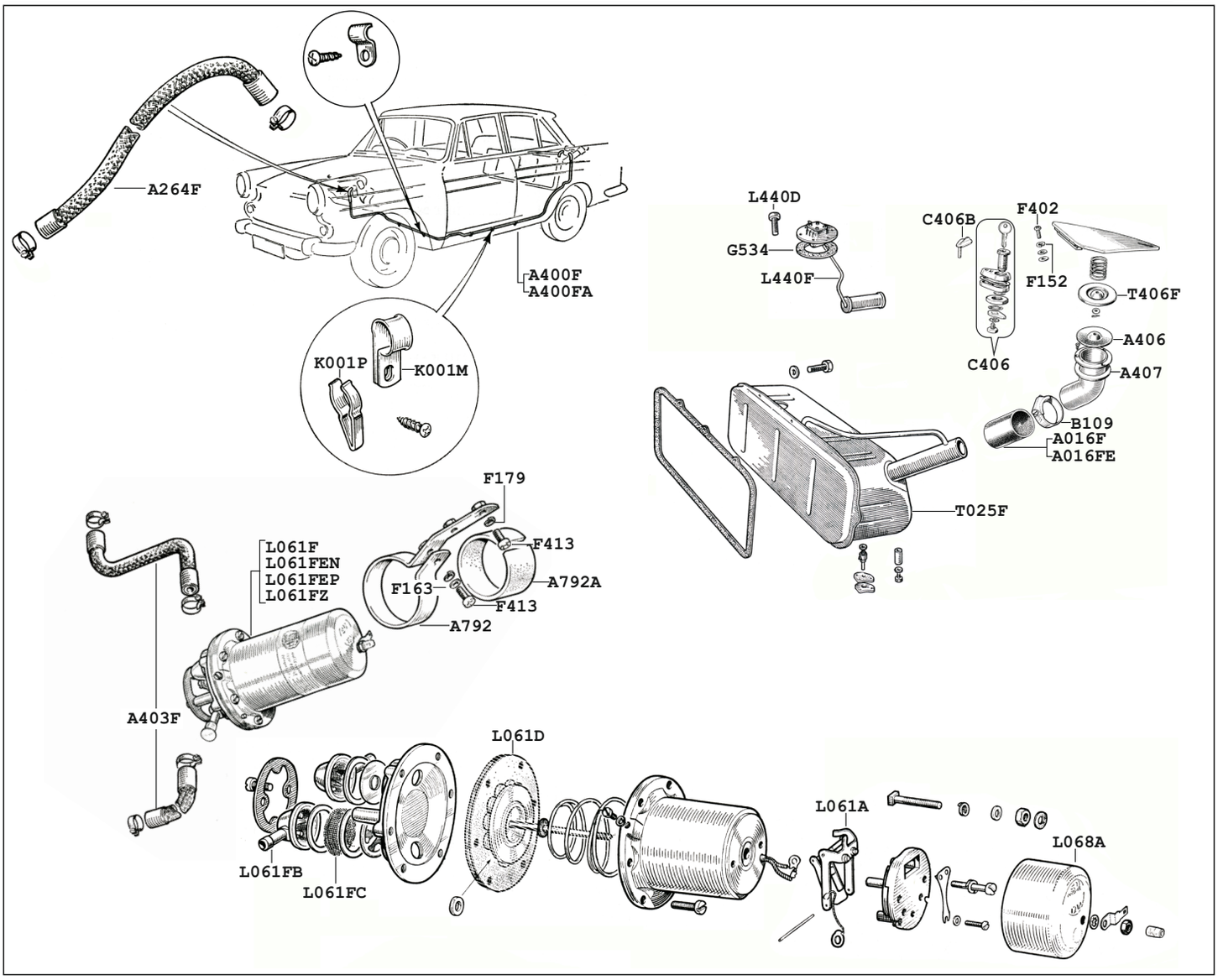


| | | |
|---|---|---|
| A016F | 1 | Hose - Tank to Neck (Saloon) |
| A016FE | 1 | Hose - Tank to Neck (Estates) |
| A264F | 1 | Flexible Hose to Carb |
| A400F | 1 | Fuel Pipe - Pump to Flexi (Saloons) |
| A400FA | 1 | Fuel Pipe - Pump to Flexi (Estates) |
| A403F | 2 | Hose - Pump |
| A406 | 1 | Seal - Filler Cap |
| A407 | 1 | Rubber Joint - Neck |
| A792 | 1 | Mounting Bracket - Pump |
| A792A | 1 | Foam Mount |
| B109 | 2 | Hose Clip |
| C406 | 1 | Lock Assembly (Used) |
| C406B | 1 | Weathershield |
| F152 | | Spring Washer 3/16” |
| F163 | | Plain Washer 1/4" |
| F179 | | Internal Star Washer 5/8” |
| F402 | | Panhead Screw 3/16” x 1/2" |
| F413 | | Panhead Screw 1/4” x 5/8” |
| G534 | 1 | Gasket - Sender Unit |
| K001M | 1 | P Clip - Pipe |
| K001P | 7 | Spring Clip - Pipe |
| L061A | 1 | Point Set - Pump |
| L061D | 1 | Diaphragm - Pump |
| L061FB | 1 | Inlet/Outlet Nozzle |
| L061FC | 2 | Filter - Pump |
| L061FK | 1 | Solid State Conversion Kit |
| L066F | 1 | Repair Kit - Pump |
| L068A | 1 | End Cap - Pump |
| L440D | 1 | Screw Set - Sender |
| L440F | 1 | Sender Unit |
| T025F | 1 | Fuel Tank |
| T406F | 1 | Metal Cap |

**Fuel Pump Options:**

| | | |
|---|---|---|
| L061F | 1 | Fuel Pump - (Original Points Style) |
| L061FEN | 1 | Fuel Pump (Solid State) Negative earth |
| L061FEP | 1 | Fuel Pump (Solid state) Positive earth |

*Points are replaced with a digital circuit board but Exterior body remains original in appearance.*

L061FZ 1 Fuel Pump (Replacement)

*12v Electric Metal Bodied Fuel Pump manufactured by Quinton Hazell offered as cheaper alternative.*

# Accelerator Linkage

| | | | |
|---|---|---|---|
| A794F | 1 | Bearing - Throttle Shaft | All |
| A795 | 4 | Ball Joint - Throttle Lever (Metal) | F1 |
| A795FA | 4 | Ball Joint - Throttle Lever (Plastic) | F2 |
| A796A | 1 | Rod - Crank Lever to Shaft | All |
| A796B | 1 | Rod - Lever to Bell Crank AMW/MG3/R6 | |
| A798FA | 1 | Return Spring | All |
| A798FB | 2 | Support Bracket | All |
| | | | |
| F153 | | Spring Washer 1/4" | |
| F163 | | Plain Washer 1/4" | |
| F202 | 4 | Plain Nut 3/16" UNF | |
| F451FS | | Set Screw 1/4" x 1/2" | |
| F452FS | | Set Screw 1/4" x 5/8" | |
| | | | |
| R409F | 1 | Pedal Rubber (non original) | |
| R794 | 1 | Gaiter - Accelerator Shaft | All |

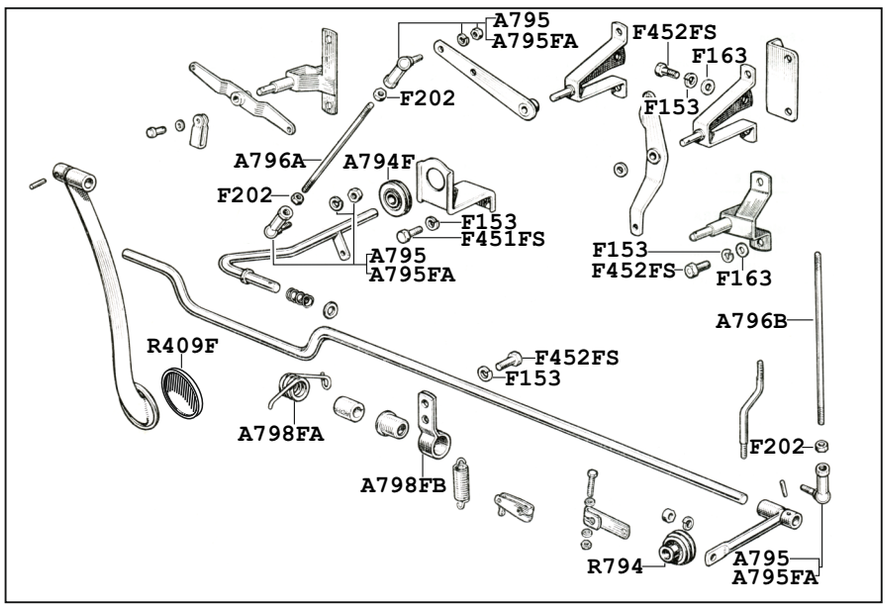


## Cooling

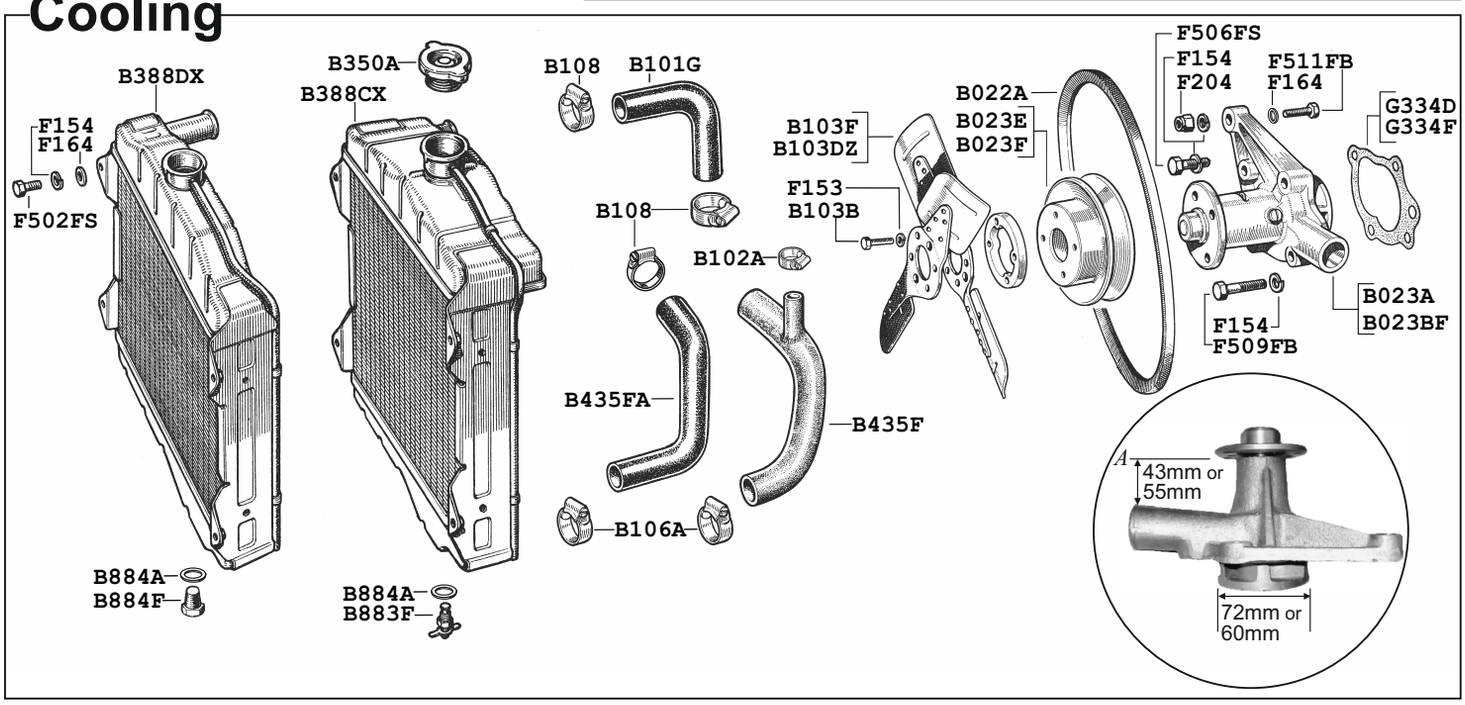


| | | | |
|---|---|---|---|
| B022A | 1 | Fan Belt | |
| B023A | 1 | Water Pump (Small Imp) | F1 +16AMW-16C |
| B023BF | 1 | Water Pump (Large Imp) | 16AA-16CAA+16GF |
| B023E | 1 | Pulley (small Impellor) | F1 + 16AMW-16C |
| B023F | 1 | Pulley (Large Impellor) | 16AA-16CAA+16GF |
| B100G | 1 | Radiator Hose & Clip Set | |
| B101G | 1 | Top Hose | |
| B102 | 1 | Heater Hose & Clip Set | |
| B102A | 1 | Hose Clip | |
| B102B | 1 | Heater Hose (metre) | |
| B103B | 4 | Bolt - Fan Blade | |
| B103DZ | 1 | Fan Blade (6 blade) Plastic | |
| B103D | 1 | Fan Blade (6 Blade) Metal | |
| B103F | 1 | Fan Blade (2 blade) | |
| B102A | 1 | Hose Clip (Stainless) | |
| B106A | 1 | Hose Clip (Stainless) | |
| B108 | 3 | Hose Clip (Stainless) | |
| B388A | 1 | Plastic Drain Tube | |
| B388CX | 1 | Radiator - Recon Exchange | F1 |
| B388DX | 1 | Radiator - Recon Exchange | F2 |

*Early radiators have a larger header tank, please ensure correct radiator returned for any Surcharge refund!*

| | | | |
|---|---|---|---|
| B350A | 1 | Radiator Cap 7lb | |
| B435F | 1 | Bottom Hose (Heater) | |
| B435FA | 1 | Bottom Hose (non heater) | |
| B883F | 1 | Drain Tap | F1 |
| B884A | 1 | Washer | |
| B884F | 1 | Drain Plug | F2 |

| | | |
|---|---|---|
| F153 | | Washer-Spring 1/4" |
| F154 | | Washer-Spring 5/16" |
| F154 | | Washer-Spring 5/16" |
| F164 | | Washer-Plain 5/16" |
| F164 | | Washer-Plain 5/16" |
| F204 | | Nut-Plain 5/16" UNF |
| F502FS | | Set Screw 5/16" x 5/8" UNF |
| F506FS | | Set Screw 5/16" x 1 1/8" UNF |
| F509FB | | Bolt 5/16" x 1 1/2" UNF |
| F511FB | | Bolt 5/16" x 1 3/4" UNF |

| | | | |
|---|---|---|---|
| G334D | 1 | Gasket (Small Imp) | F1+16AMW-16C |
| G334F | 1 | Gasket (Large Imp) | 16AA-16CAA+16GF |

**Water Pump Identification:**

*To identify your water pump before removal, measure the nose length of the casing from flange to outlet casting (A) 55mm will have a smaller impellor and 43mm a larger one. When removed, measure across the impellor. Early cars usually have a 60mm impellor and later ones the 72mm.*

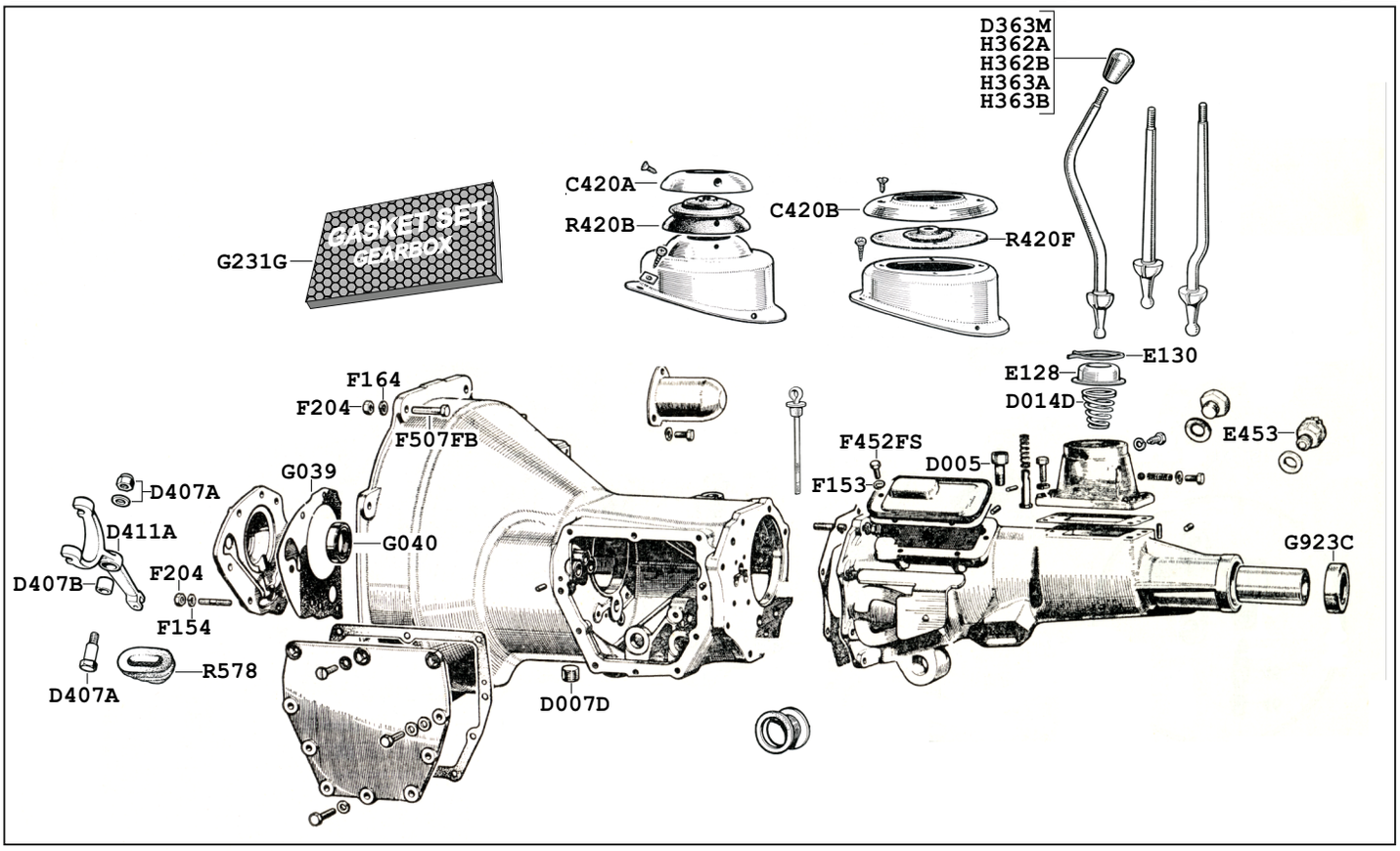


| | | | |
|---|---|---|---|
| C420A | 1 | Chrome Surround | A5/MO5/MG3/R6/W15 |
| C420B | 1 | Chrome Surround | A6/MO6/MG4/R7/W16 |
| D005 | 1 | Breather Plug | |
| D007D | 1 | Drain Plug | |
| D014D | 1 | Spring | |
| D106F | 1 | Gearbox Recon. Service | |
| D363M | 1 | Knob – Repro Original. | |
| D407A | 1 | Bolt + Nut - Clutch Pivot | |
| D407B | 1 | Bush - Clutch Pivot | |
| D411A | 1 | Lever - Clutch Release | |
| E128 | 1 | Retainer | |
| E130 | 1 | Clip - Lower Gearlever | |
| E453 | 1 | Switch - Reverse Lamp | |
| F153 | 6 | Spring Washer 1/4” | |
| F154 | 7 | Spring Washer 5/16” | |
| F164 | 7 | Plain Washer 5/16” | |
| F204 | 14 | Nut - 5/16” UNF | |
| F452FS | 6 | Set Screw 1/4" x 5/8” UNF | |
| F507FB | 7 | Bolt 5/16” x 1 1/4" UNF | |
| G039 | 1 | Gasket - Front | |
| G040 | 1 | Oil Seal - Clutch Housing | |
| G231G | 1 | Gasket Set - Gearbox | |
| G923C | 1 | Seal – Gearbox -Rear | |
| H362A | 1 | Knob - 'Morris' Wood | |
| H362B | 1 | Knob - 'Morris' Leather | |
| H363A | 1 | Knob 'MG' Wood | |
| H363B | 1 | Knob 'MG' Leather | |
| R420B | 1 | Gaiter - Round | A5/MO5/MG3/R6/W15 |
| R420F | 1 | Gaiter - Oval | A6/MO6/MG4/R7/W16 |
| R578 | 1 | Cover - Clutch Lever | |

# Gearbox Internal

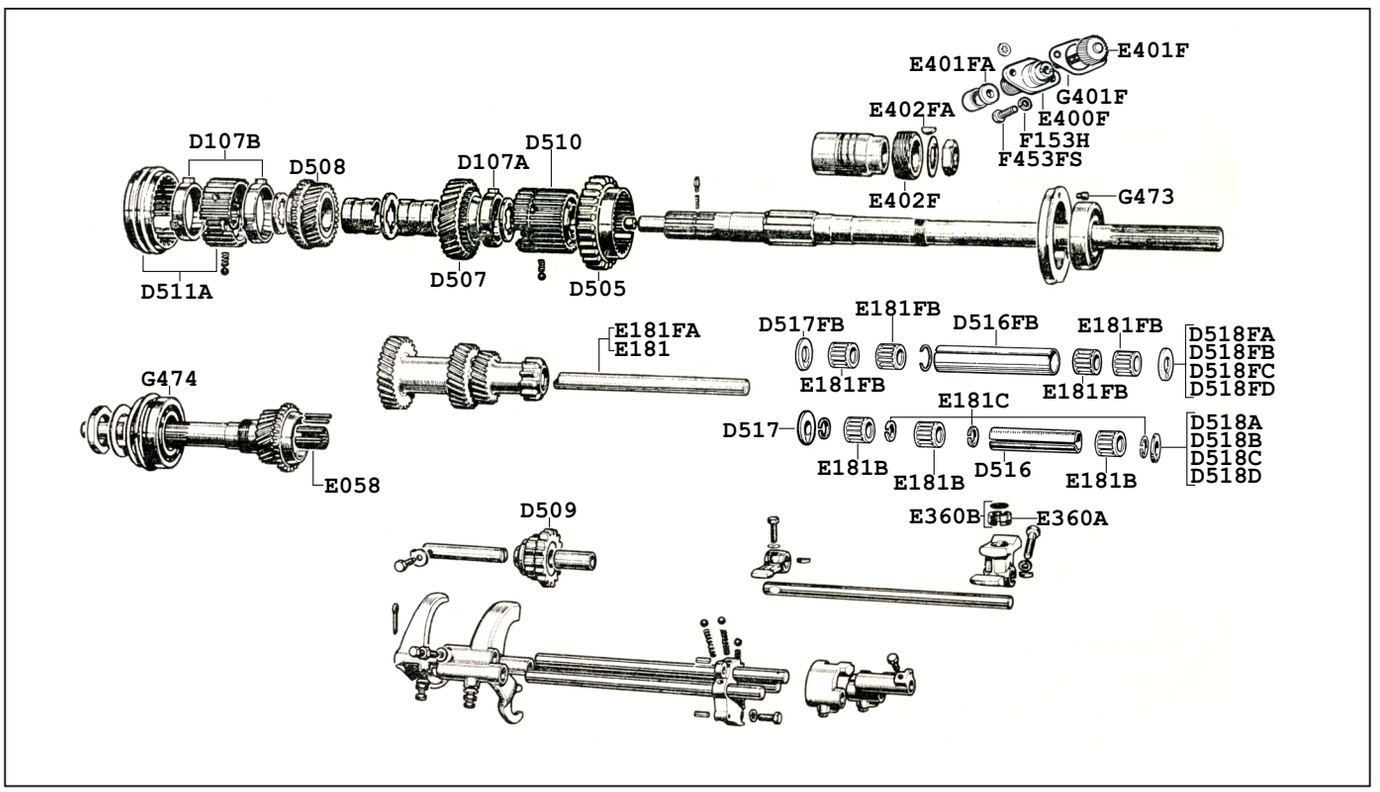


| | | |
|---|---|---|
| D107A | 1 | Synchro Ring 2nd Gear |
| D107B | 1 | Synchro Ring 3rd + 4th Gear |
| D505 | 1 | First Gear |
| D507 | 1 | Second Gear |
| D508 | 1 | Third Gear |
| D509 | 1 | Reverse Gear |
| D510 | 1 | Sliding Hub 1st + 2nd |
| D511A | 1 | Sliding Hub/Dog 4th |
| D516 | 1 | Distance Piece<br>Early A5/MO5/MG3/R6/W15 |
| D516FB | 1 | Distance Spacer - Layshaft |
| D517 | 1 | Thrust - Laygear Front<br>Early A5/MO5/MG3/R6/W15 |
| D517FB | 1 | Thrust - Laygear Front |
| D518A | 1 | Thrust - Laygear Rear 0.155<br>Early A5/MO5/MG3/R6/W15 |
| D518B | 1 | Thrust - Laygear Rear 0.157<br>Early A5/MO5/MG3/R6/W15 |
| D518C | 1 | Thrust - Laygear Rear 0.160<br>Early A5/MO5/MG3/R6/W15 |
| D518D | 1 | Thrust - Laygear Rear 0.163<br>Early A5/MO5/MG3/R6/W15 |
| D518FA | 1 | Thrust 0.156-6 Rear |
| D518FB | 1 | Thrust 0.157-9 Rear |
| D518FC | 1 | Thrust 0.160-1 Rear |
| D518FD | 1 | Thrust 0.163-4 Rear |

| | | |
|---|---|---|
| E058 | 1 | Roller Set 1st Motion Shaft |
| E181 | 1 | Layshaft - 3 Hole<br>Early A5/MO5/MG3/R6/W15 |
| E181B | 3 | Needle Roller - Layshaft 3 Hole<br>Early A5/MO5/MG3/R6/W15 |
| E181C | 1 | Circlip Layshaft<br>Early A5/MO5/MG3/R6/W15 |
| E181FA | 1 | Layshaft - 4 Hole |
| E181FB | 4 | Needle Roller - Layshaft 4 Hole |
| E360A | 1 | Nylon Bush - Gearlever |
| E360B | 1 | Brass Bush + Circlip - Gearlever |
| E400F | 1 | Housing Speedo Pinion |
| E401F | 1 | Shaft + Gear - Speedo |
| E401FA | 1 | Seal - Speedo Pinion |
| E402F | 1 | Nylon Gear Speedo 3rd Motion Shaft |
| E402FA | 1 | Woodruff Key - Speedo Gear |
| F153H | 2 | Spring Washer Heavy Duty ¼” |
| F453FS | 2 | Set Screw 1/4" x 3/4" |
| G401F | 1 | Gasket - Speedo Drive |
| G473 | 1 | Bearing Main Shaft |
| G474 | 1 | Bearing 1st Motion Shaft |

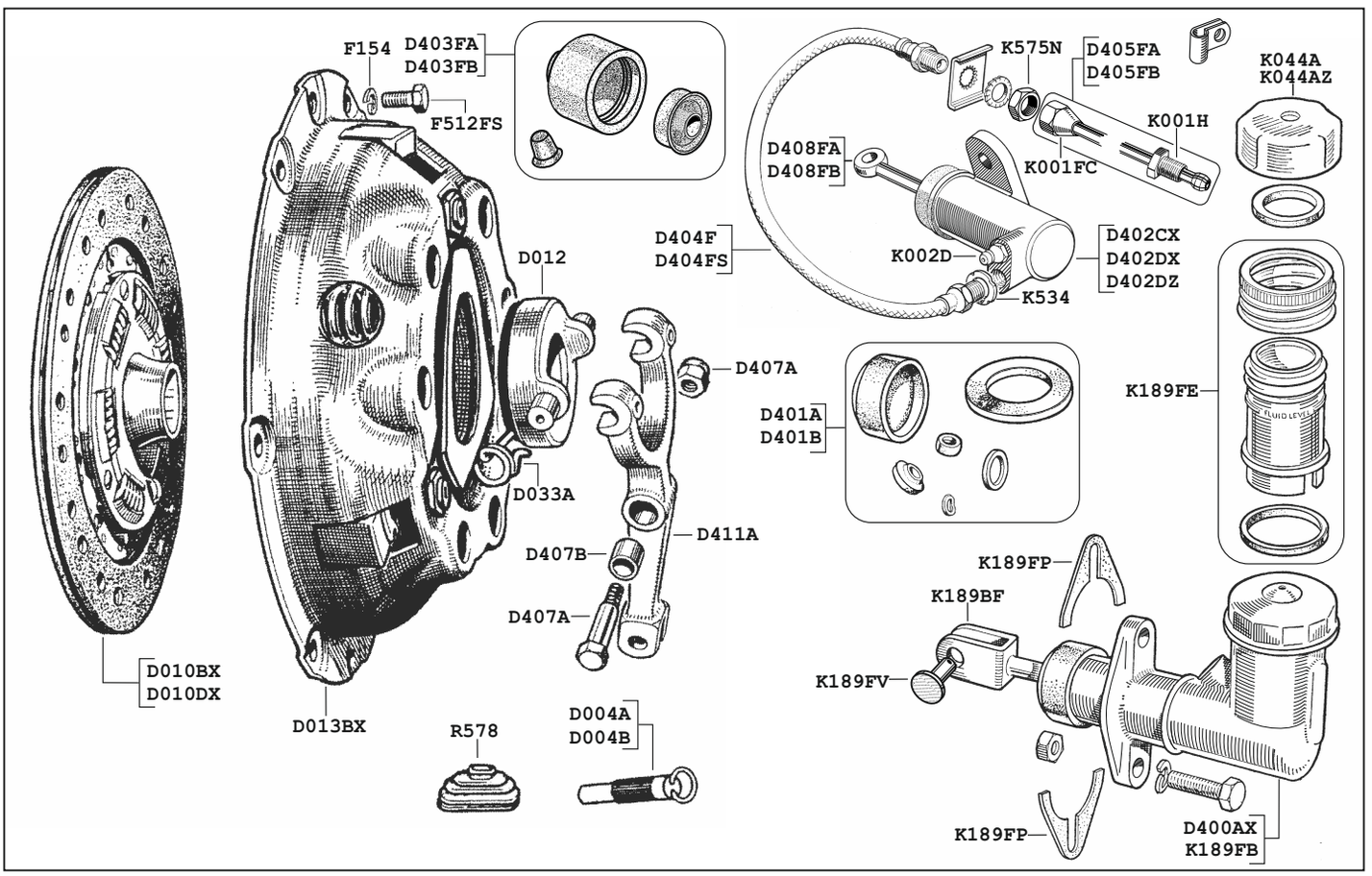


| | | | |
|---|---|---|---|
| D004A | | Alignment Tool-10 Spline | A5/MO3/MG3/R6/W15 |
| D004B | | Alignment Tool-23 Spline | A6/MO4/MG4/R7/W16 |
| D010BX | 1 | Clutch Plate-10 Spline (Exch) | A5/MO3/MG3/R6/W15 |
| D010DX | 1 | Clutch Plate-23 Spline (Exch) | A6/MO4/MG4/R7/W16 |
| D012 | 1 | Thrust (Carbon) Bearing | All |
| D013BX | 1 | Clutch Cover (Exchange) | All |
| D033A | 2 | Circlip-Thrust Bearing | All |
| D400AX | 1 | Master Cylinder (Exchange) | A5/MO3/MG3/R6/W15 |
| D401A | 1 | Repair Kit-Master Cylinder | A5/MO3/MG3/R6/W15 |
| D401B | 1 | Repair Kit-Master Cylinder | A6/MO4/MG4/R7/W16 |
| D402CX | 1 | Slave Cylinder (Exchange) | A5/MO3/MG3/R6/W15 |
| D402DX | 1 | Slave Cylinder (Exchange) | A6/MO4/MG4/R7/W16 |
| D402DZ | 1 | Slave Cylinder (Repro.) | A6/MO4/MG4/R7/W16 |
| D403FA | 1 | Repair Kit-Slave Cylinder | A5/MO3/MG3/R6/W15 |
| D403FB | 1 | Repair Kit-Slave Cylinder | A6/MO4/MG4/R7/W16 |
| D404F | 1 | Flexible Hose-Rubber | All |
| D404FS | 1 | Flexible hose-Stainless | All |
| D405FA | 1 | Clutch Pipe-Metal-RHD | All |
| D405FB | 1 | Clutch Pipe-Metal-LHD | All |
| D407A | 1 | Bolt & Nut-Pivot | All |
| D407B | 1 | Bush-Pivot Bolt | All |
| D408FA | 1 | Pushrod-Slave Cylinder | A5/MO3/MG3/R6/W15 |
| D408FB | 1 | Pushrod-Slave Cylinder | A6/MO4/MG4/R7/W16 |
| D411A | 1 | Lever-Clutch Release | All |

| | | | |
|---|---|---|---|
| F154 | 6 | Spring Washer 5/16” | |
| F512FS | 6 | Set Screw 5/16” x 1 7/8” UNF | |
| | | | |
| K001H | 1 | Tube Nut | All |
| K044A | 1 | Cap - Master Cylinder Metal | All |
| K044AZ | 1 | Cap - Master Cylinder Plastic | All |
| K002D | 1 | Bleed Screw | All |
| K189BF | 1 | Pushrod - Master Cylinder | All |
| K189FB | 1 | Master Cylinder | A6/MO4/MG4/R7/W16 |
| K189FE | 2 | Extension Top | All |
| K189FP | 2 | Packing Shim (single) | All |
| K189FV | 1 | Clevis Pin-CMC | All |
| K534 | 1 | Copper Washer | All |
| K575N | 1 | Locking Nut-hydraulics | All |
| | | | |
| R578 | 1 | Gaiter-Clutch Lever | All |

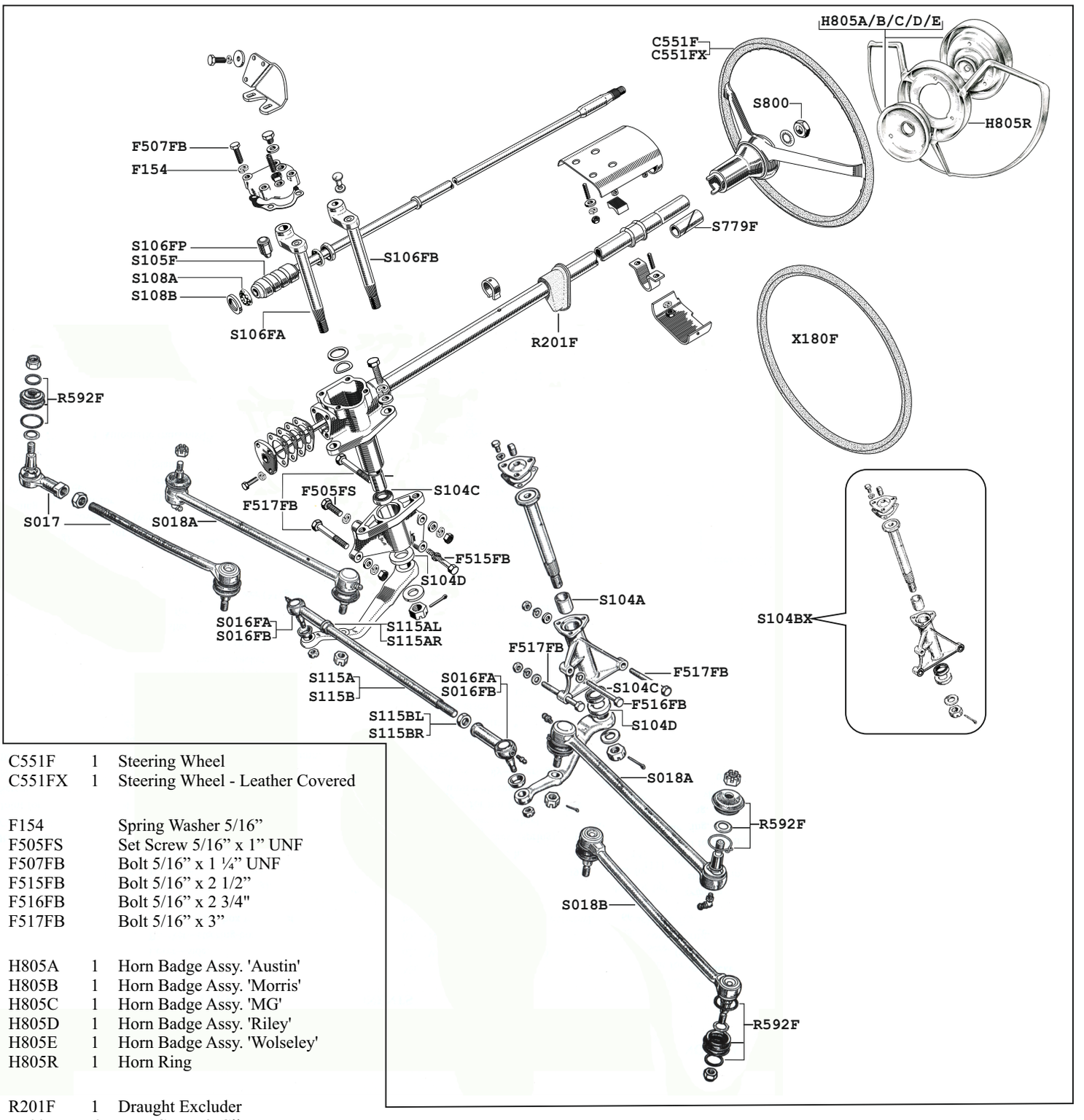


| | | |
|---|---|---|
| C551F | 1 | Steering Wheel |
| C551FX | 1 | Steering Wheel - Leather Covered |
| F154 | | Spring Washer 5/16” |
| F505FS | | Set Screw 5/16” x 1” UNF |
| F507FB | | Bolt 5/16” x 1 ¼” UNF |
| F515FB | | Bolt 5/16” x 2 1/2” |
| F516FB | | Bolt 5/16” x 2 3/4" |
| F517FB | | Bolt 5/16” x 3” |
| H805A | 1 | Horn Badge Assy. 'Austin' |
| H805B | 1 | Horn Badge Assy. 'Morris' |
| H805C | 1 | Horn Badge Assy. 'MG' |
| H805D | 1 | Horn Badge Assy. 'Riley' |
| H805E | 1 | Horn Badge Assy. 'Wolseley' |
| H805R | 1 | Horn Ring |
| R201F | 1 | Draught Excluder |
| R592F | 6 | Dust Cover & Clips T.R.E. |

| | | | |
|---|---|---|---|
| S016FA | 1 | Track Rod Ends (Pr) | F1 |
| S016FB | 1 | Track Rod Ends (Pr) | F2 |
| S017F | 1 | Drag Link Assy. (Adjustable) | F2 |
| S018A | 1 | Drag Link Assy. | F1 |
| S018B | 1 | Drag Link Assy. (Fixed) | F2 |
| S104A | 3 | Bronze Bush | |
| S104BX | 1 | Idler Box - Recon, Exchange | |
| S104FX | 1 | Steering Box - Recon. Exchange | |
| S104C | 2 | Seal | |
| S104D | 2 | Dust Seal | |
| S105F | 1 | Worm | |
| S106FA | 1 | Sector Shaft | F1 |
| S106FB | 1 | Sector Shaft | F2 |
| S106FP | 1 | Peg | |
| S108A | 2 | Bearing Set | |
| S108B | 1 | Bearing Race | |
| S115A | 1 | Centre Track Rod | F1 |
| S115AL | 1 | Lock Nut LH | F1 |
| S115AR | 1 | Lock Nut RH | F1 |
| S115B | 1 | Centre Track Rod | F2 |
| S115BL | 1 | Lock Nut LH | F2 |
| S115BR | 1 | Lock Nut RH | F2 |
| S779F | 1 | Felt Bush | |
| S800 | 1 | Nut - Steering Wheel Retainer | |
| X180F | 1 | Cover - Steering Wheel | |

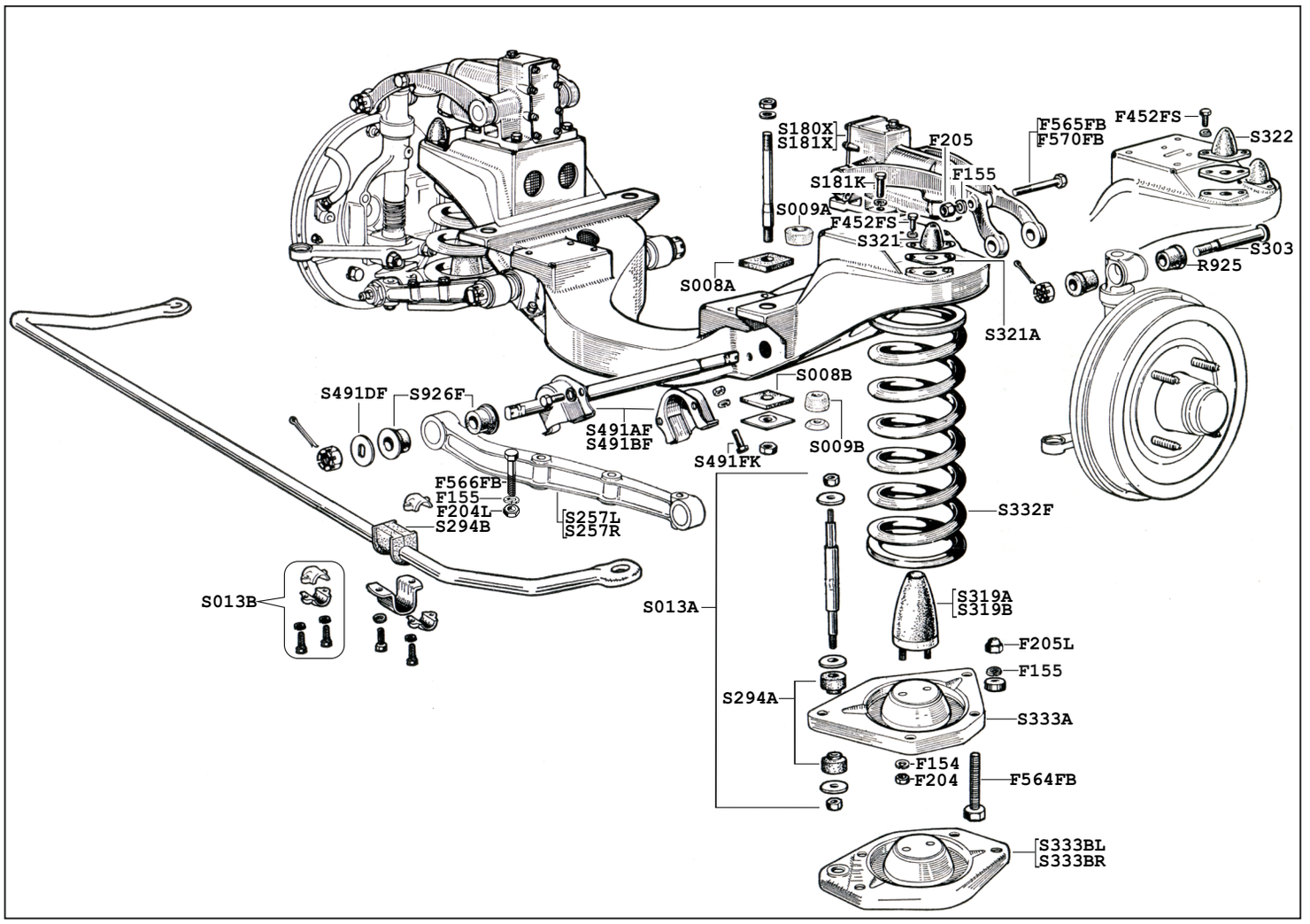


| | | | |
|---|---|---|---|
| F154 | | Spring Washer 5/16” | |
| F155 | | Spring Washer 3/8” | |
| F204 | | Nut 5/16” UNF | |
| F204L | | Locking Nut 5/16” UNF | |
| F205 | | Nut 3/8” UNF | |
| F205L | | Locking Nut 3/8” UNF | |
| F452FS | | Set Screw 1/4” x 5/8” UNF | |
| F502FS | | Set Screw 5/16” x 5/8” UNF | |
| F564FB | | Bolt 3/8” x 2 1/4” UNF | |
| F565FB | | Bolt 3/8” x 2 1/2” UNF | |
| F566FB | | Bolt 3/8” x 2 3/4” UNF | |
| F570FB | | Bolt 3/8” x 3 3/4” UNF | |
| R925 | 4 | Bush | |
| R925P | 4 | Bush (Poly) | |
| S008A | 2 | Mount Rubber - Top | F1 |
| S008B | 2 | Mount Rubber - Bottom | F1 |
| S009A | 2 | Mount Rubber - Top | F2 |
| S009B | 2 | Mount Rubber - Bottom | F2 |
| S013A | 2 | Link Assembly - A.R.B. | F2 |
| S180X | 2 | Shock Absorber (Exchange) | F1 |
| S181K | 2 | Fixing Kit - Shock | |
| S181X | 2 | Shock Absorber (Exchange) | F2 |
| S257L | 2 | Wishbone Arm LHF RHR | |
| S257R | 2 | Wishbone Arm RHF LHR | |
| S294A | 8 | Bush - ARB Link | F2 |
| S294AP | 1 | Bush - Poly – ARB Link | F2 |
| S294B | 2 | Bush - ARB Centre | F2 |
| S294BP | 1 | Bush - Poly - ARB Centre | F2 |
| S303 | 2 | Fulcrum Bolt Assembly | |
| S319A | 2 | Bump Stop | F1 |
| S319B | 2 | Bump Stop | F2 |
| S321 | 2 | Rebound Buffer | F1 |
| S321A | 2 | Alloy Spacer | F1 |
| S322 | 4 | Rebound Buffer | F2 |
| S332F | 2 | Coil Spring | |
| S333A | 2 | Spring Pan New! | F1 |
| S333BL | 1 | Spring Pan LH (Exchange) | F2 |
| S333BR | 1 | Spring Pan RH (Exchange) | F2 |
| S491AF | 2 | Pivot Bar Assembly | F2 |
| S491BF | 2 | Pivot Bar Assembly | F2 |
| S491DF | 4 | Nut - Pivot Bar | |
| S491FK | 2 | Fixing Kit - Pivot Bar | |
| S926 | 8 | Bush - Wishbone | |
| S926F | 1 | Bush (Poly) - Wishbone | |

# Front Hub Assembly

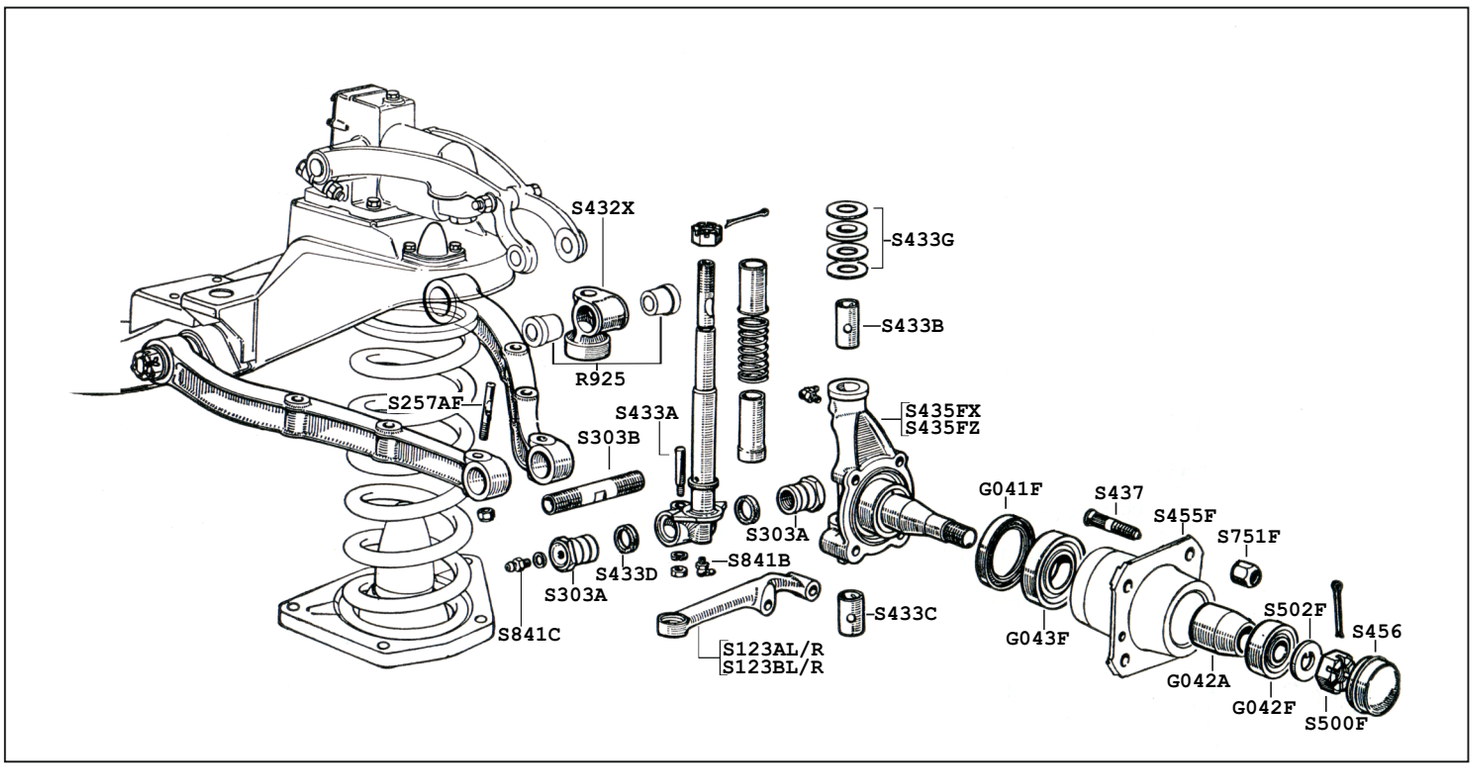


| | | | |
|---|---|---|---|
| G041F | 2 | Oil Seal – Front Hub | |
| G042A | 2 | Spacer – Front Hub | |
| G042F | 2 | Bearing - Outer | |
| G043F | 2 | Bearing - Inner | |
| | | | |
| R925 | 4 | Bush | |
| R925P | 4 | Bush - Polypropylene | |
| | | | |
| S123AL | 1 | Lever - Steering Arm LH | F1 |
| S123AR | 1 | Lever - Steering Arm RH | F1 |
| S123BL | 1 | Lever - Steering Arm LH | F2 |
| S123BR | 1 | Lever - Steering Arm RH | F2 |
| S257AF | 4 | Cotter - Wishbone Arm | |
| S303A | 2 | Bush (Pair) - Bottom | |
| S303B | 2 | Fulcrum Pin | |
| S432X | 2 | Trunnion (Exchange) | |
| S433 | 2 | King Pin + Bushes | |
| S433A | 2 | Cotter Pin | |
| S433B | 2 | Bush - Top | |
| S433C | 2 | Bush - Bottom | |
| S433D | 4 | Cork Washer | |
| S433E | 2 | Rubber Washer | |
| S433G | 2 | Thrust Washer (Set) | |
| S434AF | 2 | Dust Excluder + Spring | |
| S434F | 2 | King Pin Kit | |
| S435FX | 2 | Stub Axle Assy (Exchange) | |
| S435FZ | 2 | Stub Axle (N.O.S.) | |
| S455F | 2 | Hub Assembly | |
| S437 | 8 | Wheel Stud | |
| S456 | 2 | Grease Cap Retainer | |
| S500F | 2 | Hub Nut - Stub Axle | |
| S502F | 2 | Washer - Stub Axle | |
| S751F | 16 | Wheel Nut | |
| S841A | 2 | Grease Nipple 45 degree | |
| S841B | 2 | Grease Nipple 90 Degree | |
| S841C | 2 | Grease Nipple Straight | |

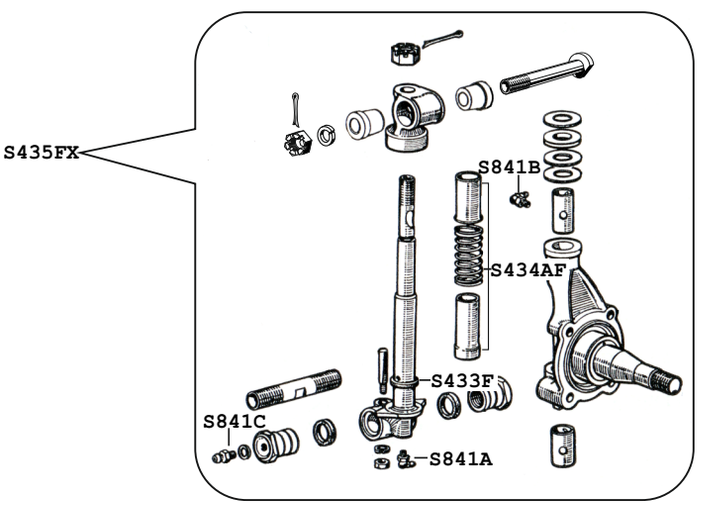


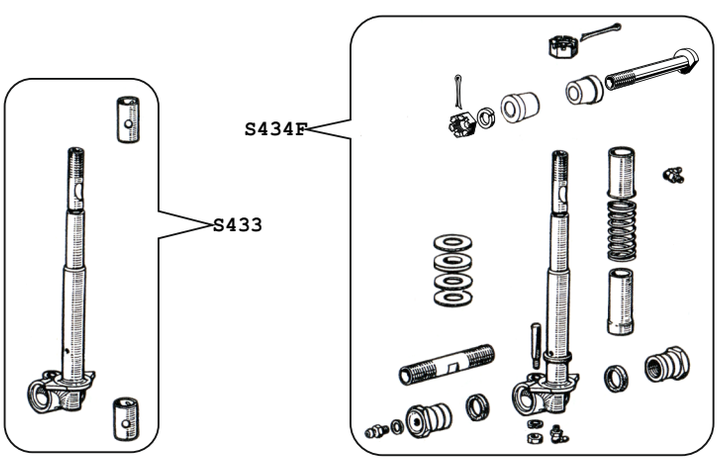


X219LOAN Tool Hire - King Pin Reamer

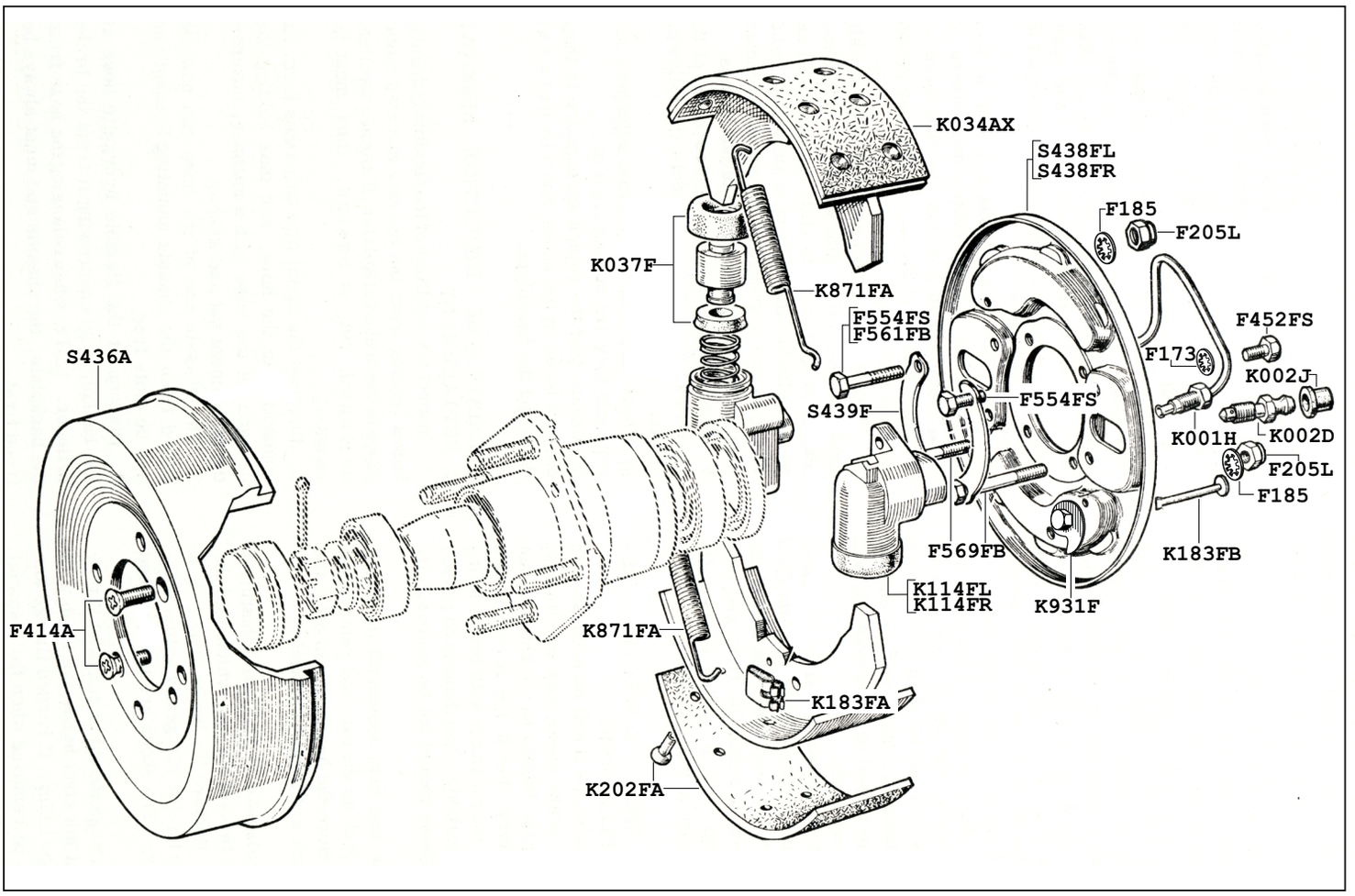


| | | | |
|---|---|---|---|
| F173 | 4 | Internal Star Washer 1/4" | |
| F185 | 4 | External Star Washer 3/8” | |
| F205L | 4 | Nut - Self Locking 3/8” UNF | F1 |
| F205L | 6 | Nut - Self Locking 3/8” UNF | F2 |
| F414A | 4 | Screw - Drum to Hub | |
| F452FS | 8 | Bolt - Back Plate to Brake Cylinder | |
| F554FS | 4 | Set Screw - Back Plate to Axle (upper) | F1 |
| F554FS | 2 | Set Screw - Back Plate to Axle (upper) | F2 |
| F561FB | 2 | Set Screw - Back Plate to Axle (upper) | F2 |
| F569FB | 4 | Bolt - Back Plate to Axle (lower) | |

| | | |
|---|---|---|
| K001H | 4 | Tube Nut |
| K002D | 2 | Bleed Screw |
| K002J | 2 | Rubber Cover - Bleed Screw |
| K034AX | 1 | Brake Shoe Set (Exchange) |
| K037F | 4 | Repair Kit - Wheel Cylinder |
| K114FL | 2 | Wheel Cylinder LH |
| K114FR | 2 | Wheel Cylinder RH |
| K183FA | 4 | Clip - Shoe Retainer |
| K183FB | 2 | Pin - Shoe Retainer |
| K202FA | 1 | Brake Linings + Rivets (axle Set) |
| K871FA | 4 | Pull - Off Spring |
| K931F | 4 | Brake Adjuster Repair Kit |

| | | |
|---|---|---|
| S436A | 2 | Brake Drum |
| S438FL | 1 | Back Plate LH |
| S438FR | 1 | Back Plate RH |
| S439F | 4 | Locktab |

# Rear Brakes

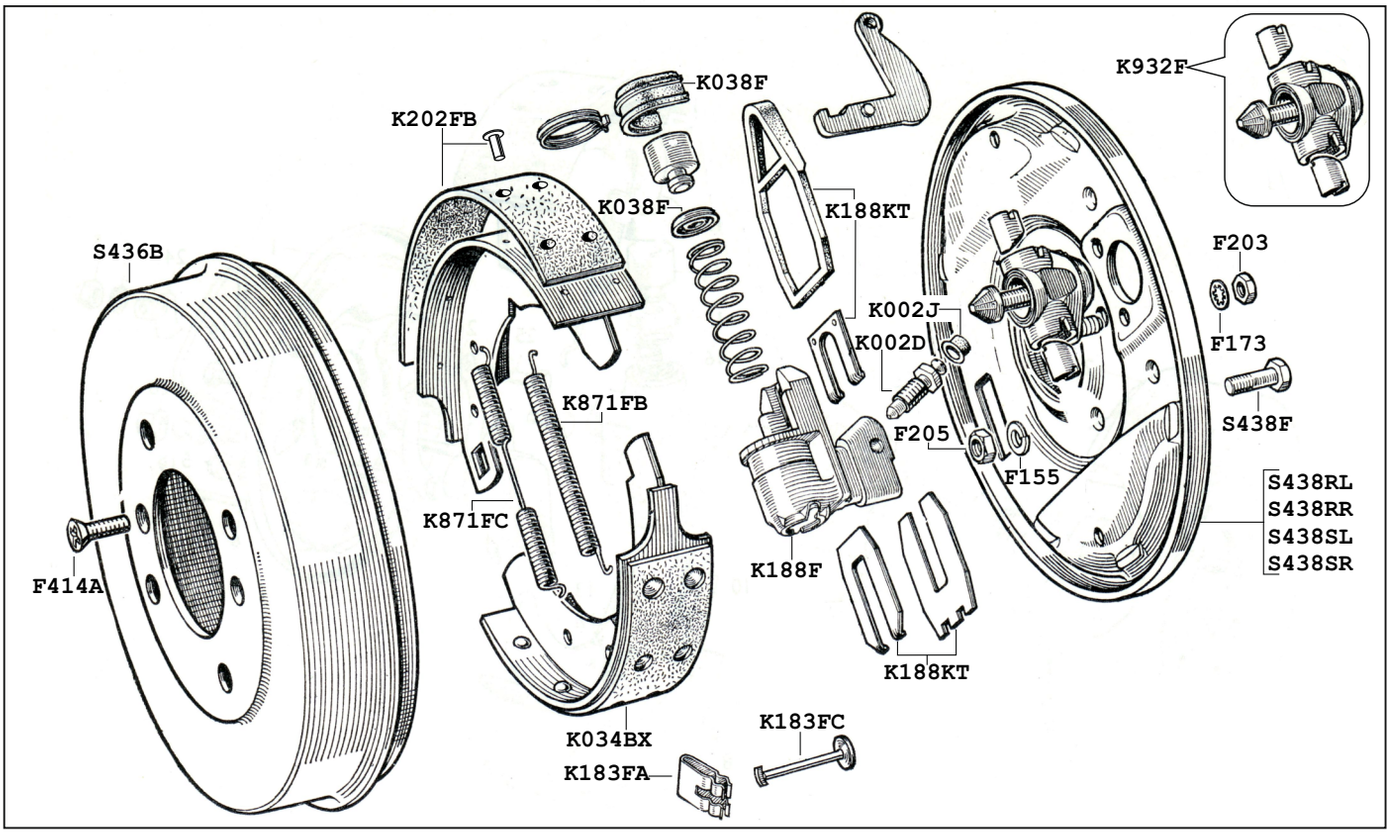


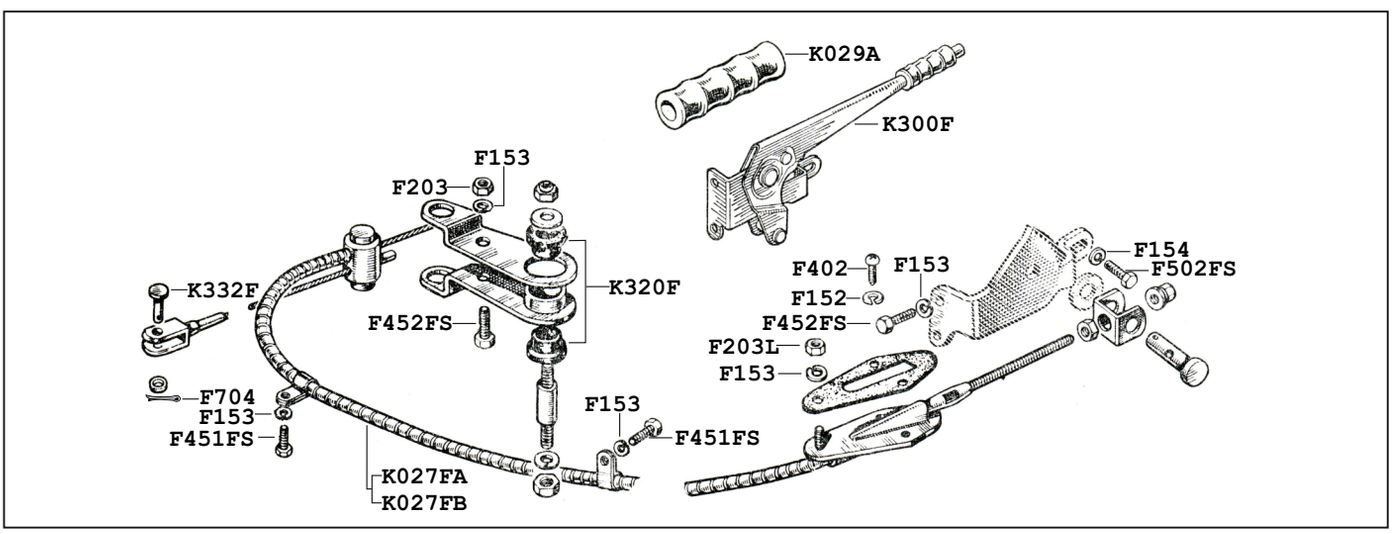


| | | | |
|---|---|---|---|
| F152 | | Spring Washer 3/16” | |
| F153 | | Spring Washer 1/4" | |
| F154 | | Spring Washer 5/16” | |
| F155 | | Spring Washer 3/8” | |
| F173 | | Internal Star Washer 1/4" | |
| F203 | | Plain Nut 1/4" UNF | |
| F203L | | Lock Nut 1/4" UNF | |
| F205 | | Plain Nut 3/8” UNF | |
| F402 | | Screw 3/16” UNF x 1/2" | |
| F414A | 4 | Screw - Brake Drum | |
| F451FS | | Set Screw 1/4" UNF x 1/2" | |
| F452FS | | Set Screw 1/4" UNF x 5/8” | |
| F502FS | | Set Screw 5/16” UNF x 5/8” | |
| F704 | | Split Pin | |
| | | | |
| K002D | 2 | Bleed Screw | |
| K002J | 2 | Rubber Cover - Bleed Screw | |
| K027FA | 1 | Hand Brake Cable | F1 |
| K027FB | 1 | Hand Brake Cable | F2 |
| K029A | 1 | Hand Grip | |

| | | | |
|---|---|---|---|
| K034BX | 1 | Brake Shoes (axle set) Exch. | |
| K038F | 2 | Repair Kit - Wheel Cylinder | |
| K183FA | 4 | Clip - Shoe Retainer | |
| K183FC | 4 | Steady Pin - Shoe Retainer | |
| K188F | 2 | Wheel Cylinder | |
| K188KT | 2 | Fitting Kit - Wheel Cylinder | |
| K202FB | 1 | Linings + Rivets | |
| K300F | 1 | Hand Brake Lever Assembly | |
| K320F | 2 | Bush - Hand Brake Pivot | |
| K332F | 2 | Clevis Pin | |
| K871FB | 2 | Spring - Adjuster End | |
| K871FC | 2 | Spring - Cylinder End | |
| K932F | 2 | Adjuster Assembly | |
| | | | |
| S436B | 2 | Brake Drum | |
| S438F | 8 | Bolt - Back Plate to Axle Case | |
| S438RL | 1 | Back Plate LH | F1 |
| S438RR | 1 | Back Plate RH | F1 |
| S438SL | 1 | Back Plate LH | F2 |
| S438SR | 1 | Back Plate RH | F2 |

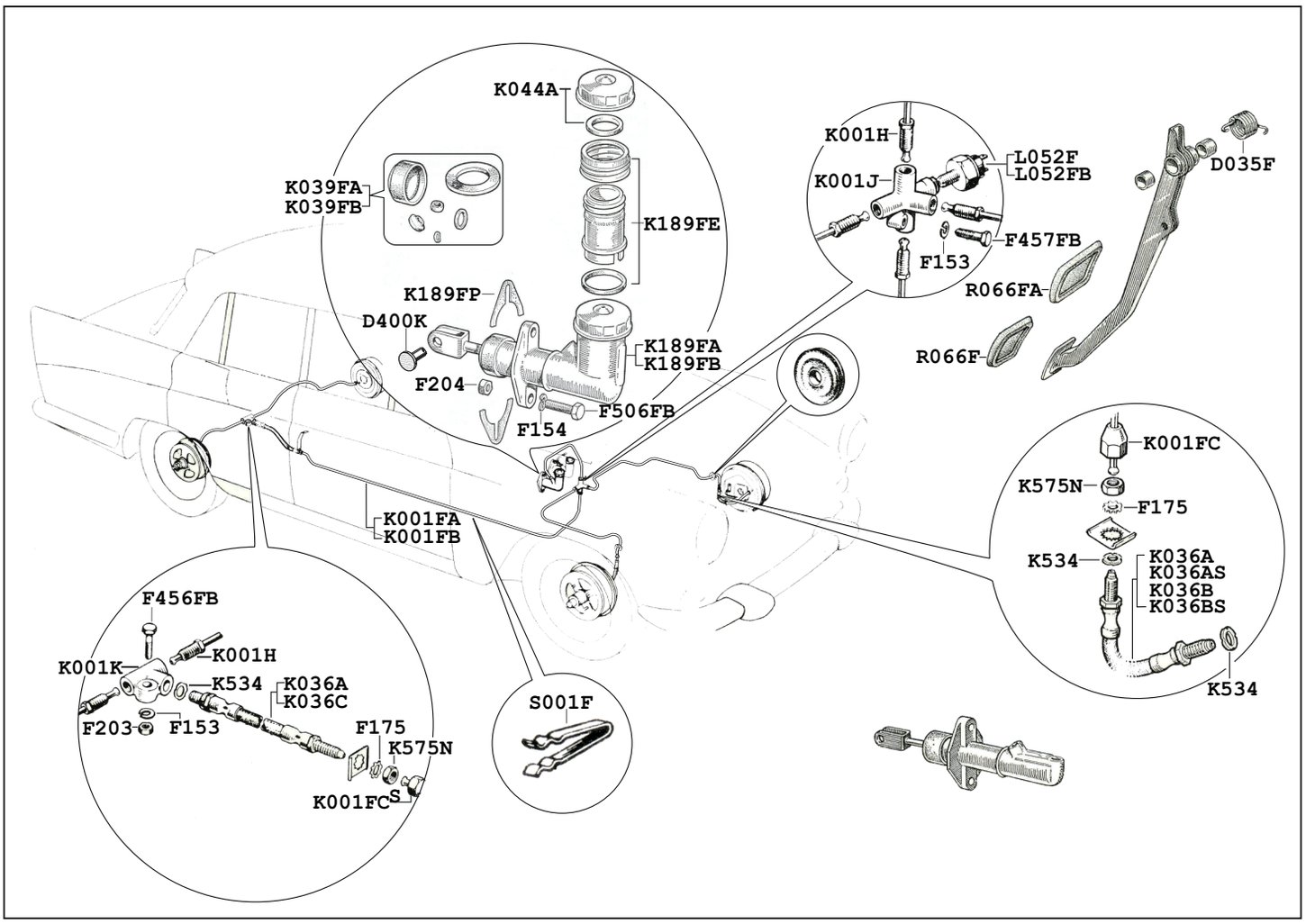


| | | | |
|---|---|---|---|
| D035F | 2 | Spring Brake + Clutch Pedal | |
| D400K | 1 | Clevis Pin - Master Cylinder | |
| | | | |
| F153 | | Spring Washer 1/4" | |
| F154 | | Spring Washer 5/16” | |
| F175 | | Internal Star Washer 3/8” | |
| F203 | | Nut 1/4" UNF | |
| F204 | | Nut 5/16” UNF | |
| F456FB | | Bolt 1/4" UNF x 1 1/8” | |
| F457FB | | Bolt 1/4" UNF x 1 1/4" | |
| F506FB | | Bolt 5/16” UNF x 1 1/8” | |
| | | | |
| K001FA | 1 | Brake Pipe Set | F1 |
| K001FB | 1 | Brake Pipe Set | F2 |
| K001FC | | Nut - Brake Pipe | |
| K001H | | Tube Nut - Brake Pipe | |
| K001J | 1 | 4 Way Union | |
| K001K | 1 | 3 Way Union | |
| K036A | 3 | Brake Hose - Front + Rear | F1 |
| K036AS | 1 | Brake Hose Set (Stainless) | F1 |
| K036B | 2 | Brake Hose - Front | F2 |
| K036BS | 1 | Brake Hose Set (Stainless) | F2 |
| K036C | 1 | Brake Hose - Rear | F2 |
| K039FA | 1 | Repair Kit - Master Cylinder | F1 |
| K039FB | 1 | Repair Kit - Master Cylinder | F2 |
| K044A | 1 | Cap - Master Cylinder | |
| K189FA | 1 | Master Cylinder | F1 |
| K189FB | 1 | Master Cylinder | F2 |
| K189FE | 1 | Extension – Master Cylinder | |
| K189FP | 2 | Packing Piece | |
| K534 | | Copper Washer | |
| K575N | 3 | Locking Nut | |
| | | | |
| L052F | 1 | Switch - Brake Light 1/8” | |
| L052FB | 1 | Switch - Brake Light 5/8” | |
| | | *Very rare option for L052F* | |
| | | | |
| R066F | 2 | Pedal Pad - Clutch + Brake | |
| R066FA | 1 | Pedal Pad – Automatic | |
| | | | |
| S001F | 6 | Clip - Brake Pipe to Chassis | |

# Rear Springs

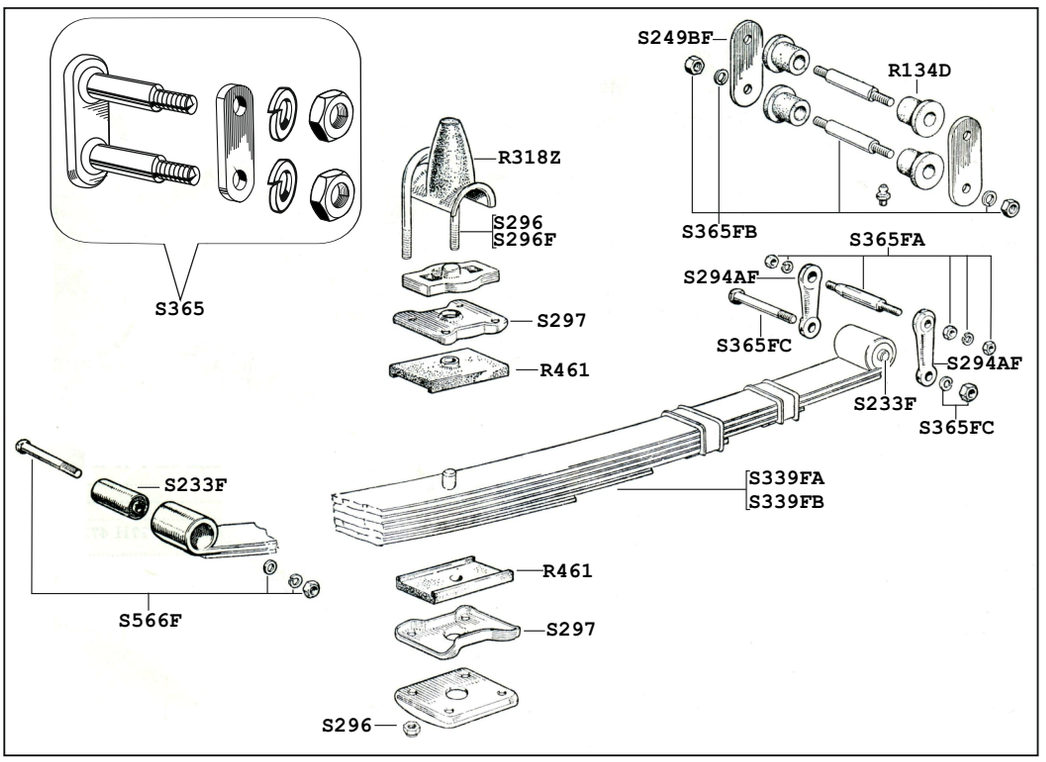


**Rear Springs**

| | | | |
|---|---|---|---|
| R134D | 8 | Bush - Rear Shackle | F2 |
| R134DP | 1 | Poly Bush Set - Rear Shackle | F2 |
| R318Z | 2 | Bump Stop - Rear | |
| R461 | 4 | Saddle Pad Rubber | |
| R461P | 4 | Saddle Pad Poly | |
| | | | |
| S233F | 2 | Silentbloc Bush - Front | F2 |
| S233F | 4 | Silentbloc Bush - Front + Rear | F1 |
| S249AF | 2 | Shackle Plates (Pair) | F1 |
| S249BF | 4 | Shackle Plate | F2 |
| S296 | 4 | U Bolt + Nuts (Saloon) | |
| S296F | 4 | U Bolts + Nuts (Estate) | |
| S297 | 4 | Saddle Plate | |
| S339FA | 1 | Rear Spring (includes S233F) | F1 |
| S339FB | 2 | Rear Spring (includes S233F) | F2 |
| S365 | 2 | Shackle Plate Assy.(replacement) | F2 |
| S365FA | 2 | Shackle Pin + Nuts - Rear Top | F1 |
| S365FB | 4 | Shackle Pin + Nuts - Rear | F2 |
| S365FC | 2 | Shackle Pin + Nuts - Rear Bottom | F1 |
| S566F | 2 | Bolt, Nut + Spring Washer | |

**Rear Shock Absorber**

| | | | |
|---|---|---|---|
| F154 | 4 | Spring Washer 5/16” | F2 |
| F155 | 2 | Spring Washer 3/8” | All |
| F155H | 2 | Spring Washer-HD 3/8” | All |
| F156H | 2 | Spring Washer-HD 7/16” | All |
| F165 | 2 | Plain Washer 3/8” | F2 |
| F204 | 4 | Nut 5/16” UNF | F2 |
| F205 | 2 | Nut 3/8” UNF | All |
| F206 | 2 | Nut 7/16” UNF | All |
| F558FS | 2 | Set Screw 3/8” UNF x 1 3/8” | F2 |
| | | | |
| S178K | 2 | Bolt Mounting Kit | All |
| S178XL | 1 | Shock Absorber LH (exchange) | F1 |
| S178XR | 1 | Shock Absorber RH (exchange) | F1 |
| S179A | 2 | U Clamp (inc nuts + washers) | F2 |
| S179XL | 1 | Shock Absorber LH (exchange) | F2 |
| S179XR | 1 | Shock Absorber RH (exchange) | F2 |
| S183X | 2 | Link (exchange) | All |

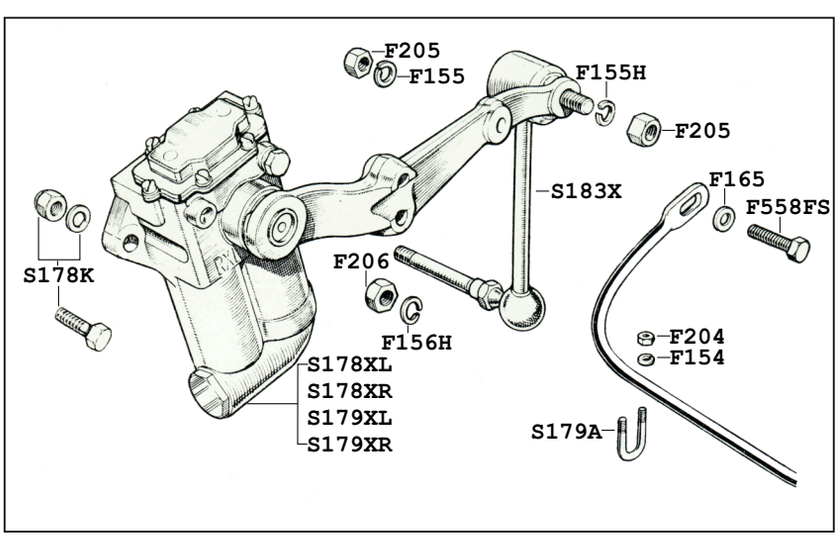

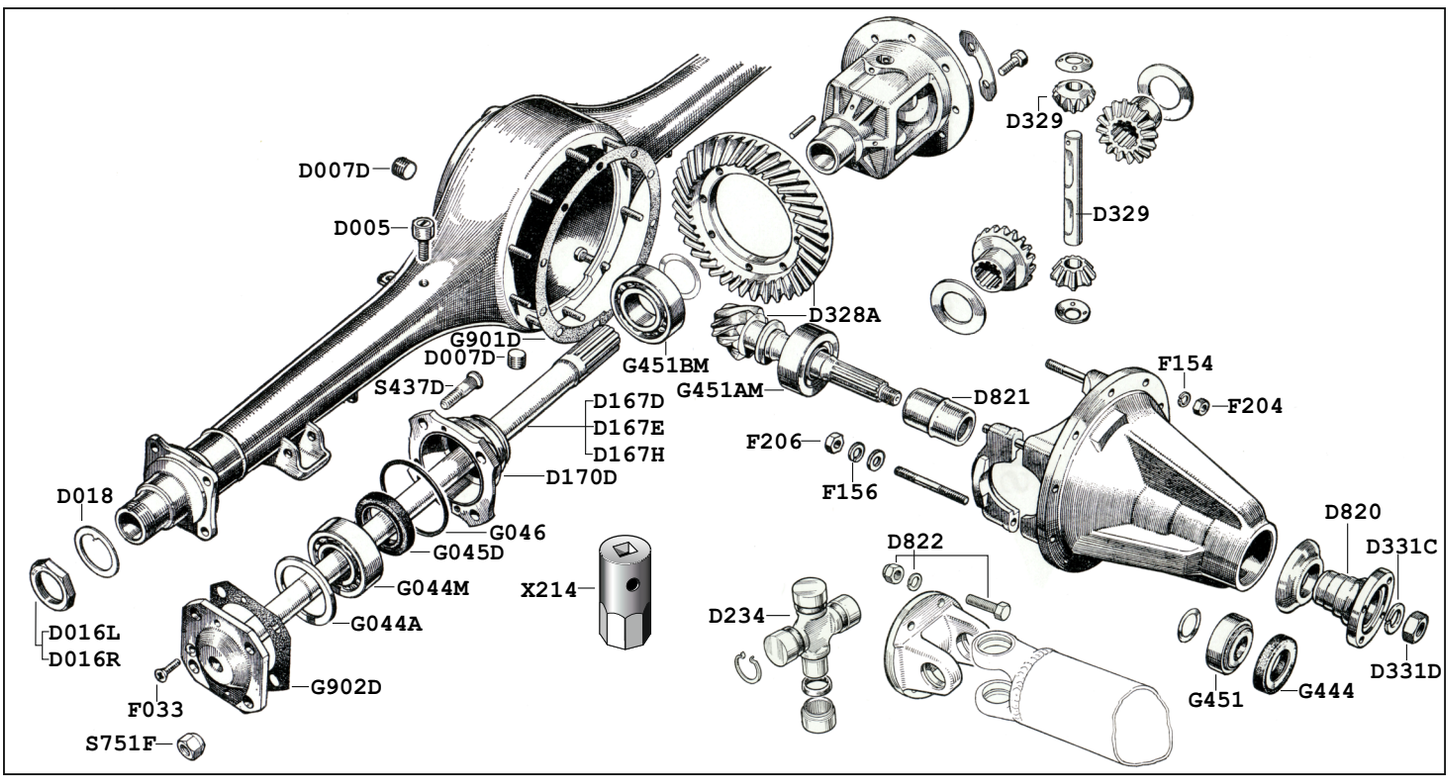


| | | | |
|---|---|---|---|
| D005 | 1 | Breather Plug | |
| D007D | 2 | Drain + Filler Plug | |
| D016L | 1 | Nut Left Hand | |
| D016R | 1 | Nut Right Hand | |
| D018 | 2 | Lock Washer | |
| D023B | 1 | Diff Assy. 10:43 (used) | MG3/R6/A6/MO6/MG4/R7/W16 |
| D167D | 2 | Half Shaft 10 Spline (used) | Early A5/MO5/MG3/R6/W15 |
| D167E | 2 | Half Shaft 25 Spline (used) | Late A5/MO5/MG3/R6/W15 |
| D167H | 2 | Half Shaft (used) | A6/MO6/MG4/R7/W16 |
| D170D | 2 | Bearing Carrier - Hub | |
| D234 | 2 | Universal Joint | |
| D328A | 1 | Crown Wheel & Pinion | MG3/R6/A6/MO6/MG4/R7/W16 |
| D329 | 2 | Pinion - Differential | |
| D331C | 1 | Washer - Flange Pinion | |
| D333D | 1 | Nut - Flange | |
| D820 | 1 | Drive Flange (used) | |
| D821 | 1 | Spacer - Bearing | |
| D822 | 2 | Nut & Bolt Set | |
| F033 | 2 | Screw | |
| F154 | | Spring Washer 5/16” | |
| F156 | | Spring Washer 7/16” | |
| F204 | | Nut 5/16” UNF | |
| F206 | | Nut 7/16” UNF | |
| G044A | 2 | Spacer | |
| G044M | 2 | Bearing - Rear Hub | |
| G045D | 2 | Oil Seal - Rear Hub | |
| G046 | 2 | 'O' Ring - Rear Hub | |
| G444 | 1 | Oil Seal - Differential | |
| G451 | 1 | Bearing - Front Pinion | |
| G451AM | 1 | Bearing - Rear Pinion | |
| G451BM | 2 | Bearing - Carrier | |
| G901D | 1 | Gasket - Diff | |
| G902D | 2 | Gasket - Rear Hub | |
| S437D | 10 | Stud - Road Wheel | |
| S751F | 10 | Nut - Road Wheel | |
| X214 | 1 | Box Spanner - Rear Hub | |

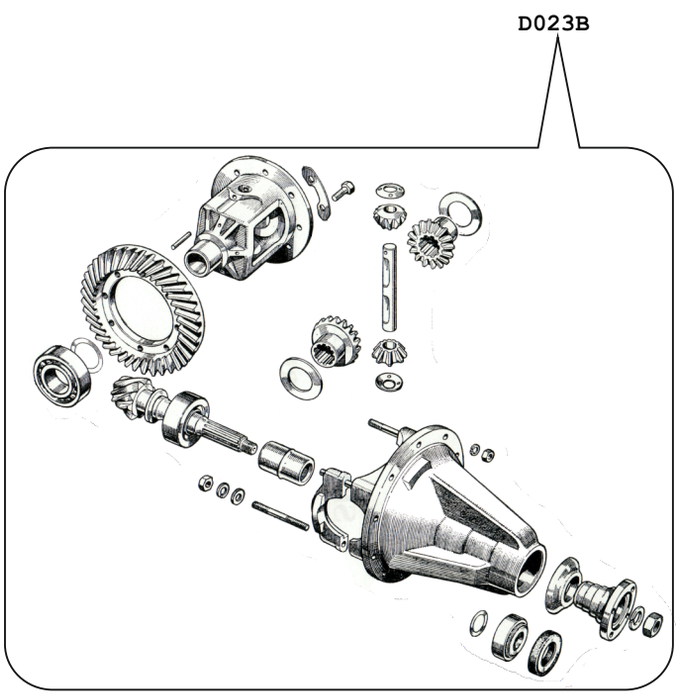

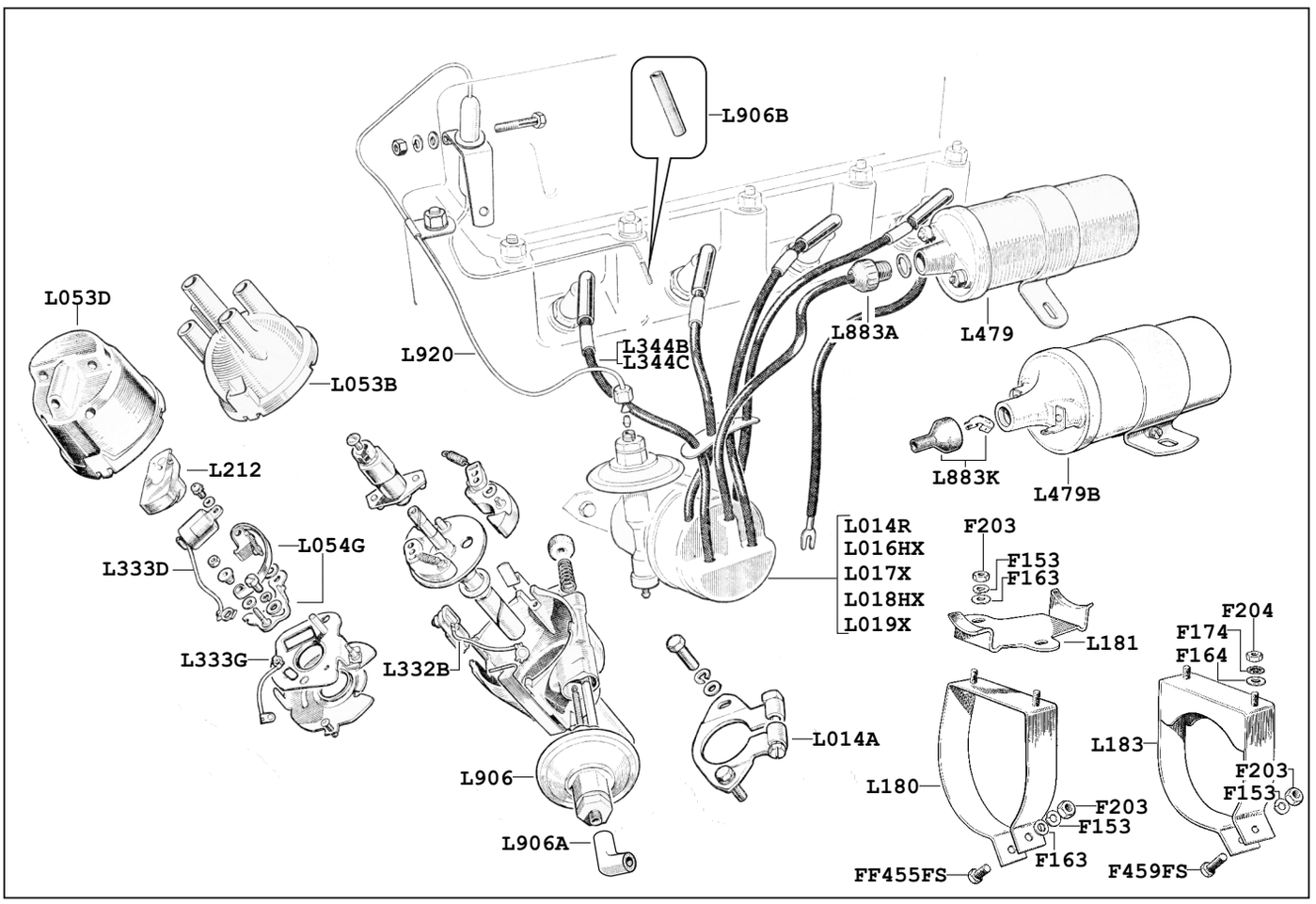


| | | |
|---|---|---|
| F153 | | Spring Washer 1/4" |
| F163 | | Plain Washer 1/4" |
| F164 | | Plain Washer 5/16” |
| F174 | | Internal Star Washer 5/16” |
| F203 | | Plain Nut 1/4" UNF |
| F204 | | Plain Nut 5/16” UNF |
| F455FS | | Set Screw 1/4” UNF x 1” |
| F459FS | | Set Screw 1/4" UNF x 1 1/2" |

| | | | |
|---|---|---|---|
| L014A | 1 | Clamp Plate | |
| L014R | 1 | Distributor (replacement) | |
| L016HX | 1 | Distributor Exchange | A5/MO5/W15 |
| L017X | 1 | Distributor Exchange | MG3/R6 |
| L018HX | 1 | Distributor Exchange | A6/MO6/W16 |
| L019X | 1 | Distributor Exchange | MG4/R7 |
| L053B | 1 | Cap (Push-in Connections) | F2 1966 on |
| L053D | 1 | Cap (Screw-in Connections) | F1 + F2 to 1966 |
| L054G | 1 | Contact Points | |
| L180 | 1 | Bracket - Coil to Dynamo | Early F1 |
| L181 | 1 | Coil Support | Early F1 |
| L182 | 1 | Clamp - Coil Support | |
| L183 | 1 | Bracket - Coil to Dynamo | Late F1 + F2 |
| L212 | 1 | Rotor Arm | |
| L332B | 1 | Low Tension Lead | |
| L333D | 1 | Condenser | |
| L333G | 1 | Base Plate | |
| L344B | 1 | H.T. Lead Set (screw-in) | F1 + F2 to 1966 |
| L344C | 1 | H.T. Lead Set (Push-in) | F2 1966 on |
| L479 | 1 | Coil (Screw-in) | F1 + F2 to 1966 |
| L479B | 1 | Coil (Push-in) | F2 1966 on |
| L883A | 1 | Acorn Nut (long) | F1 + F2 to 1966 |
| L883K | 5 | Rubber Cover + Terminal | F2 1966 on |
| L906 | 1 | Vacuum Unit (replacement) | |
| L906A | 1 | Adapter to Carb | |
| L920 | 1 | Vacuum Pipe | |

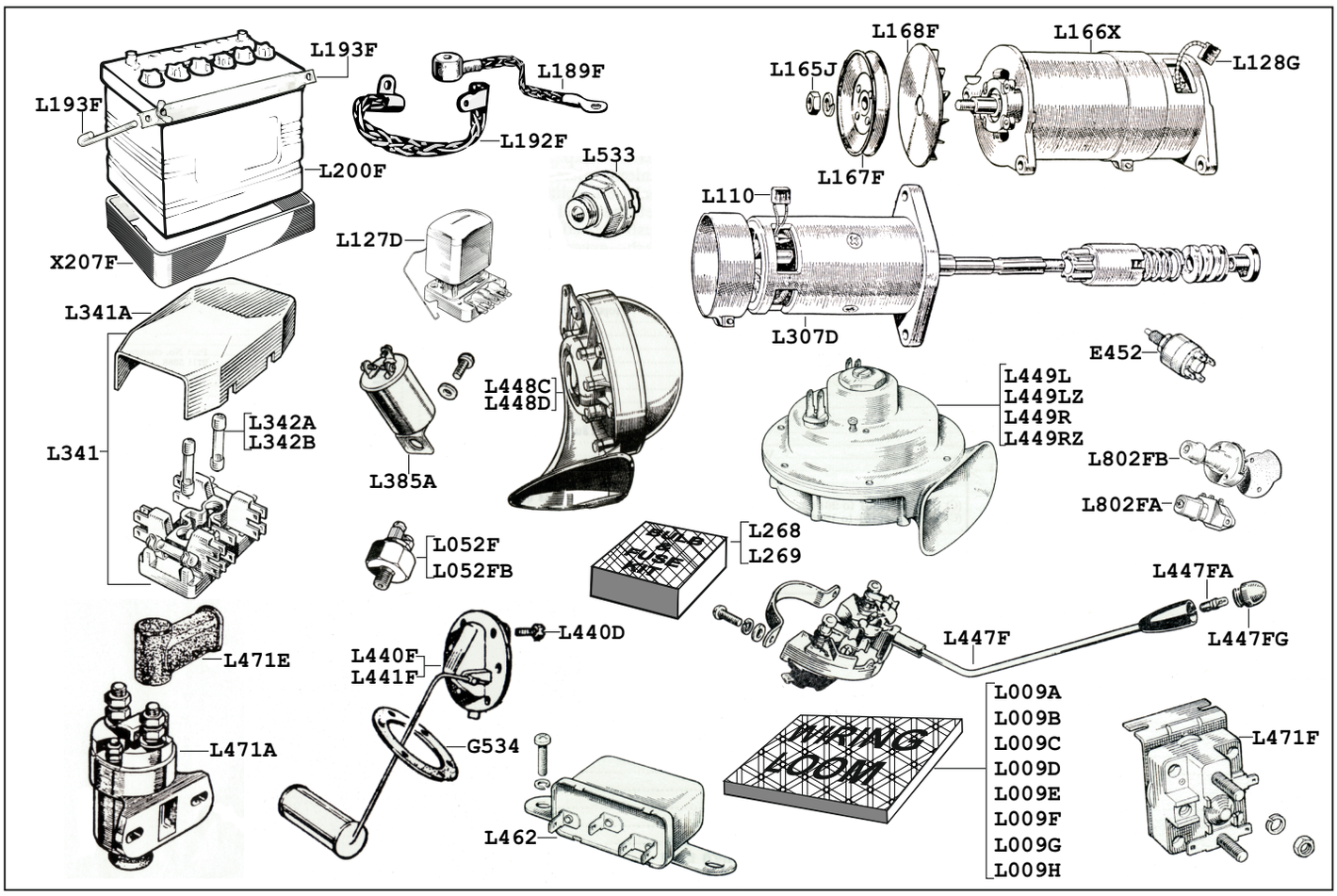


| | | | |
|---|---|---|---|
| E452 | 1 | Inhibitor Switch | Auto Only |
| G534 | 1 | Gasket - Sender | |
| L009A | 1 | Wiring Loom | A5 |
| L009B | 1 | Wiring Loom | A6/MO6/W16 |
| L009C | 1 | Wiring Loom | MO5 |
| L009D | 1 | Wiring Loom | MG3 |
| L009E | 1 | Wiring Loom | MG4 |
| L009F | 1 | Wiring Loom | R6 |
| L009G | 1 | Wiring Loom | R7 |
| L009H | 1 | Wiring Loom | W15 |
| L045F | 1 | Horns + Light Loom | |
| L052F | 1 | Stop Light Switch 1/8” | |
| L052FB | 1 | Stop Light Switch 5/8” * | |
| | | * *Very rare option for L052F* | |
| L110 | 1 | Brush Set - Starter | |
| L127D | 1 | Regulator | |
| L128G | 1 | Brush Set - Dynamo | |
| L165J | 1 | Nut - Dynamo Pulley | |
| L166X | 1 | Dynamo (Replacement) | |
| L167F | 1 | Pulley - Dynamo | |
| L168F | 1 | Fan - Dynamo | |
| **L170K** | **1** | **Alternator Conversion Kit** Includes: | |
| L170 | 1 | Alternator | |
| L170A | 1 | Pulley - Alternator | |
| L170B | 1 | Fan - Alternator | |
| L170F | 1 | Strap - Alternator | |
| L170G | 1 | Bracket - Alternator | |
| L170J | 1 | Fan Belt - Alternator | |
| L170L | 1 | Plug - Alternator | |
| L189F | 1 | Lead - Battery Neg. | |
| L190A | 1 | Lead - Switch to Start. | |
| L191F | 1 | Lead - Battery Pos. | |

| | | | |
|---|---|---|---|
| L192F | 1 | Lead - Engine Earth | |
| L193F | 1 | Clamp Bar + Bolts | |
| L200F | 1 | 12v Battery | |
| L268 | 1 | Bulb + Fuse Kit | Austin + Morris |
| L269 | 1 | Bulb + Fuse Kit | MG, Riley, Wolseley |
| L307D | 1 | Starter Motor | |
| L307K | 1 | Fixing Kit - Starter | |
| L311F | 1 | Rear Screen Heater | |
| L341 | 1 | Fuse Box & Cover | |
| L341A | 1 | Cover - Fuse Box | |
| L342A | 1 | 35 amp Fuse | |
| L342B | 1 | 50 amp Fuse | |
| L385A | 1 | Flasher Unit | |
| L440D | 1 | Screw Set | |
| L440F | 1 | Fuel Sender Unit | Saloons |
| L441F | 1 | Fuel Sender Unit | Estates |
| L447F | 1 | Indicator Switch | |
| L447FA | 1 | Bulb | |
| L447FG | 1 | Green Lens | |
| L448C | 1 | W/T Horn Low Note | F1 |
| L448D | 1 | W/T Horn High Note | F1 |
| L449L | 1 | Horn - Low Note | F2 |
| L449LZ | 1 | Horn - Low Replcmnt. | |
| L449R | 1 | Horn - High Note | F2 |
| L449RZ | 1 | Horn - High Replcmnt. | |
| L462 | 1 | Relay - Horn | |
| L471A | 1 | Starter Switch | F1 |
| L471E | 2 | Terminal Cover | F2 |
| L471F | 1 | Starter Switch | F2 |
| L533 | 1 | Reverse Switch | |
| L802FA | 1 | Dipswitch | F1 |
| L802FB | 1 | Dipswitch | F2 |
| L940F | 2 | Switch - Door Interior | |
| L940FA | 1 | Switch - Boot Lamp | |
| X207F | 1 | Battery Tray | |

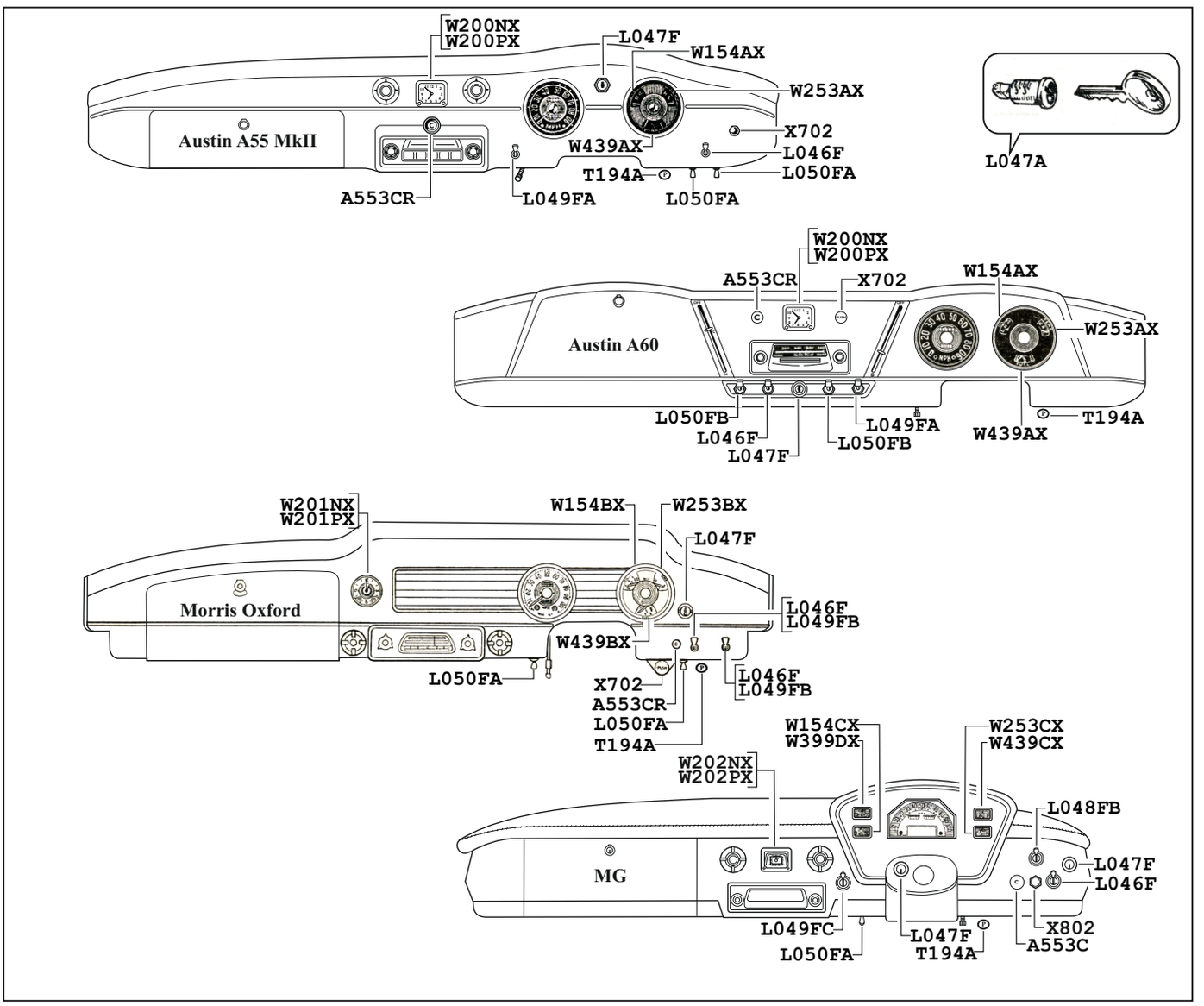


**Dashboards (Austin Morris MG)**

| | | | |
|---|---|---|---|
| A553C | 1 | Choke Cable | MG3/4 |
| A553CR | 1 | Choke Cable | A5/6 MO5/6 |
| | | | |
| L046F | 1 | Switch - Head Lamps | |
| L047A | 1 | Barrel + Keys | |
| L047F | 1 | Switch - Ignition (less L047A) | |
| L048FB | 1 | Switch - Panel | MG3/4 |
| L049FA | 1 | Switch - Wiper | A5/6 |
| L049FB | 1 | Switch - Wiper | MO5/6 |
| L049FC | 1 | Switch - Wiper | MG3/4 |
| L050FA | 2 | Switch - Panel + Blower | A5 MO5/6 |
| L050FA | 1 | Switch - Blower | MG3/4 |
| L050FB | 2 | Switch - Panel + Blower | A6 |
| L277 | | Bulb - Panel Light | |
| L277A | 1 | Bulb - Clock | |
| | | | |
| T194A | 1 | Bonnet Pull Cable | |
| | | | |
| W031CR | 1 | Cable - Speedometer | |
| W154AX | 1 | Oil gauge (exchange*) | A5/6 |
| W154BX | 1 | Oil Gauge (exchange*) | MO5/6 |
| W154CX | 1 | Oil Gauge (exchange*) | MG3/4 |
| W200NX | | Time Clock - Neg. Earth (ex*) | A5/6 |
| W200PX | | Time Clock - Pos. Earth (ex*) | A5/6 |
| W201AX | 1 | Speedo - Repair Service | A5/6 |
| W201BX | 1 | Speedo - Repair Service | MO5/6 |
| W201CX | 1 | Speedo - Repair Service | MG3/4 |
| W201NX | | Time Clock - Neg. Earth (ex*) | MO5/6 |
| W201PX | | Time Clock - Pos. Earth (ex*) | MO5/6 |
| W202NX | | Time Clock - Neg. Earth (ex*) | MG3/4 |
| W202PX | | Time Clock - Pos. Earth (ex*) | MG3/4 |
| W253AX | 1 | Temp Gauge (exchange*) | A5/6 |
| W253BX | 1 | Temp Gauge (exchange*) | MO5/6 |
| W253CX | 1 | Temperature Gauge (ex*) | MG3/4 |
| W399DX | 1 | Ammeter (exchange*) | MG3/4 |
| W439AX | 1 | Fuel Gauge (exchange*) | A5/A6 |
| W439BX | 1 | Fuel Gauge (exchange*) | MO5/6 |
| W439CX | 1 | Fuel Gauge (exchange*) | MG3/4 |
| | | | |
| X702 | 1 | Washer Pump (replacement) | A5/6 MO5/6 |
| X802 | 1 | Washer Pump Valve | MG3/4 |

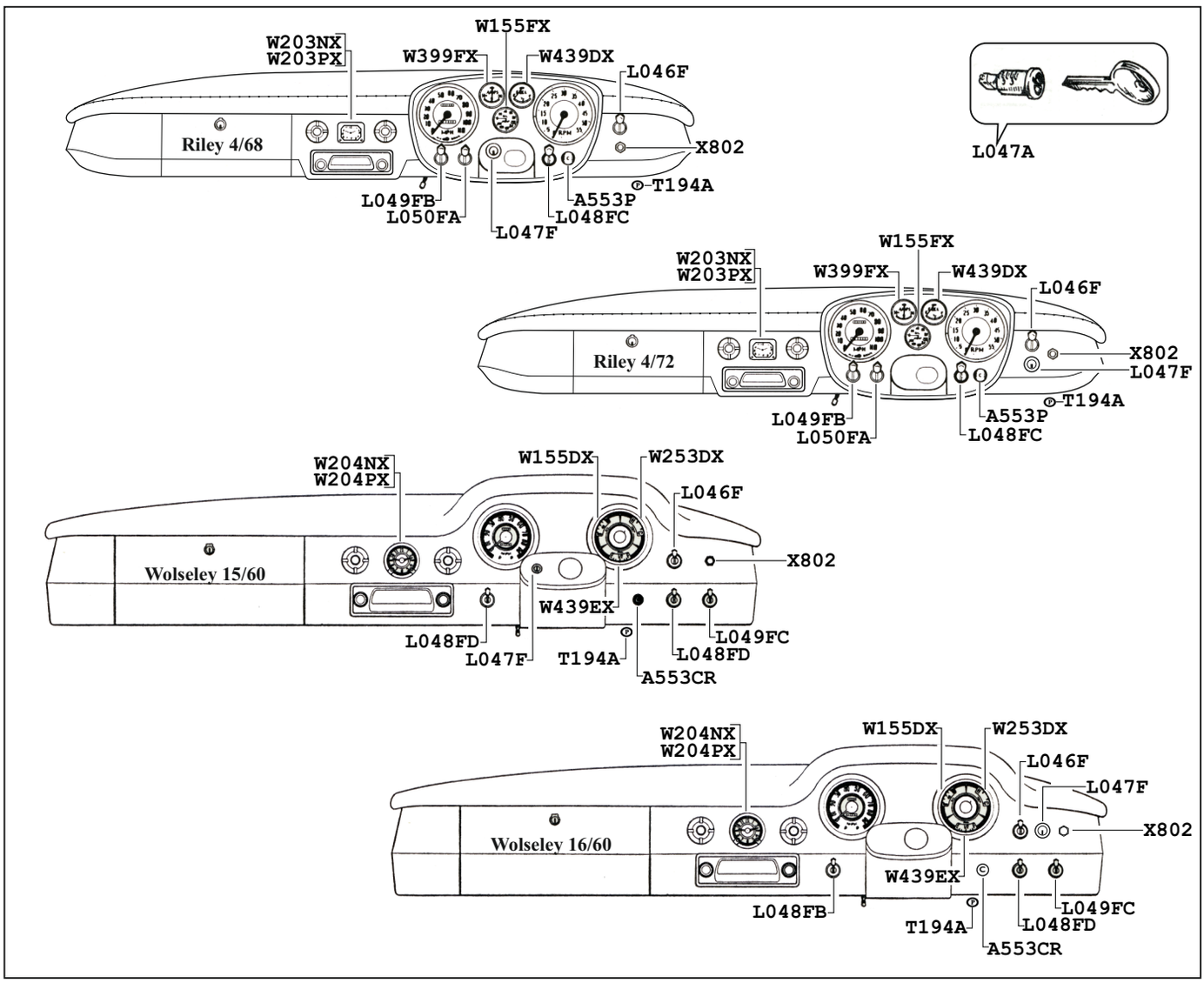


**Dashboards (Riley & Wolseley)**

| | | | |
|---|---|---|---|
| A553CR | 1 | Choke Cable | W15/16 |
| A553P | 1 | Choke Cable | R6/7 |
| | | | |
| L046F | 1 | Switch - Head Lamps | |
| L047A | 1 | Barrel + Keys | |
| L047F | 1 | Switch - Ignition (less L047A) | |
| L048FC | 1 | Switch - Panel | R6/R7 |
| L048FD | 1 | Switch - Panel + Blower | W15/16 |
| L049FB | 1 | Switch - Wiper | R6/7 |
| L049FC | 1 | Switch - Wiper | W15/16 |
| L050FA | 1 | Switch - Blower | R6/7 |
| L277 | | Bulb - Panel Light | |
| L277A | 1 | Bulb - Clock Light | |
| | | | |
| T194A | 1 | Bonnet Pull Cable | |
| | | | |
| W031CR | 1 | Cable - Speedometer | |
| W154DX | 1 | Oil Gauge (exchange*) | W15/16 |
| W155FX | 1 | Oil/Water Gauge (ex*) | R6/7 |
| W203NX | | Time Clock - Neg. Earth (ex*) | R6/7 |
| W203PX | | Time Clock - Pos. Earth (ex*) | R6/7 |
| W204NX | | Time Clock - Neg. Earth (ex*) | W15/16 |
| W204PX | | Time Clock - Pos. Earth (ex*) | W15/16 |
| W253DX | 1 | Temp Gauge (exchange*) | W15/16 |
| W399FX | 1 | Ammeter Gauge (exchange*) | R6/7 |
| W439DX | 1 | Fuel Gauge (exchange*) | R6/7 |
| W439EX | 1 | Fuel Gauge (exchange*) | W15/16 |
| | | | |
| X802 | 1 | Washer Pump Valve | R6/7 W15/16 |

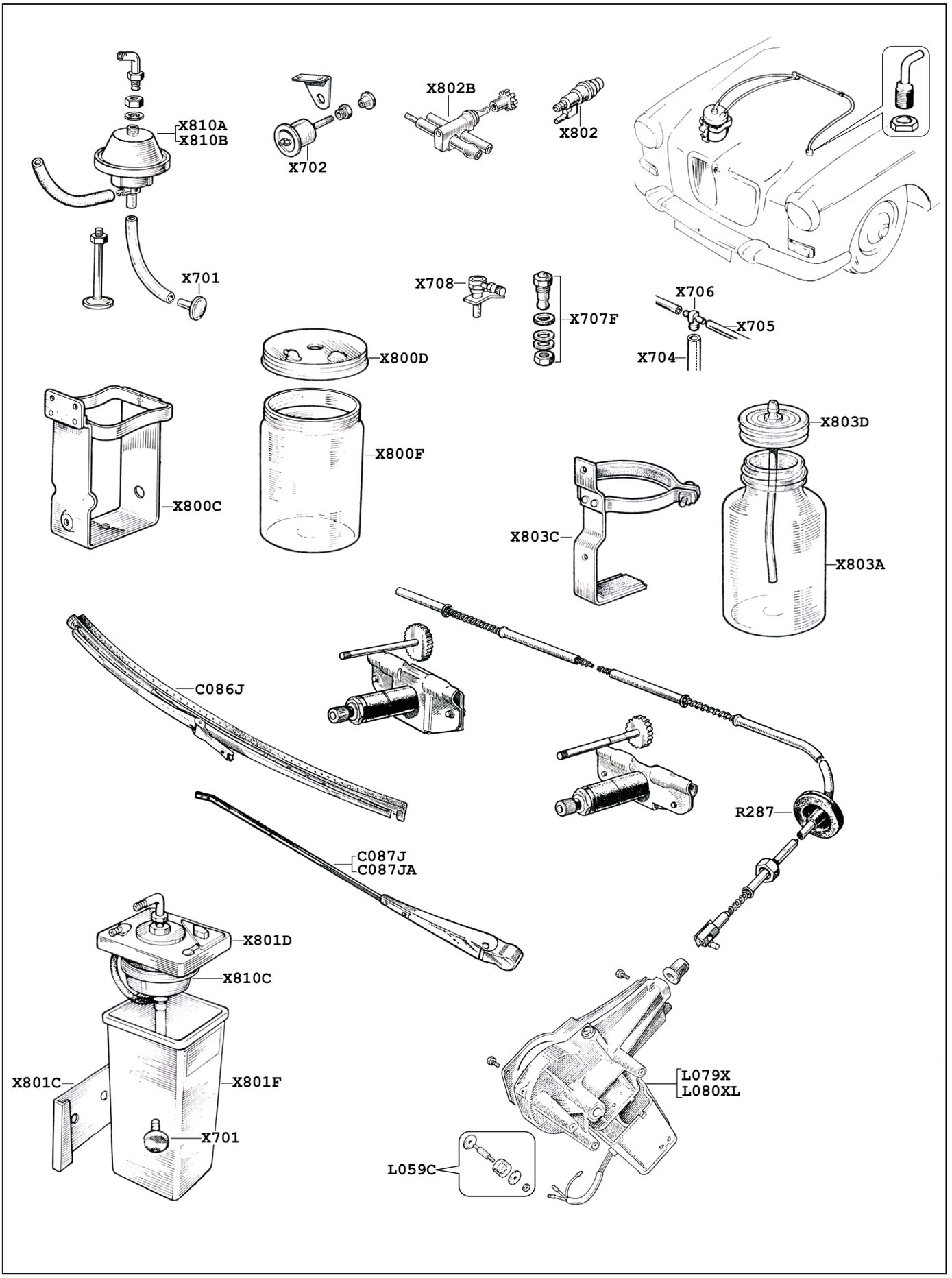
X810A
X810B
X702
X802B
X802
X701
X708
X707F
X706
X705
X704
X800D
X800F
X800C
X803D
X803C
X803A
C086J
R287
C087J
C087JA
X801D
X810C
X801C
X801F
X701
L079X
L080XL
L059C

| | | | |
|---|---|---|---|
| C086J | 2 | Wiper Blade | |
| C087J | 2 | Wiper Arm (LH Park) | F1 + F2 |
| C087JA | 2 | Wiper Arm (RH Park) | Early F1 |
| H800 | 1 | Decal Set - Trico | MG34/R67/W1516 |
| L059C | 3 | Mount Kit - Wiper Motor | |
| L079X | 1 | Wiper Motor (ex*) | Early F1 |
| L080X | 1 | Wiper Motor (ex*) | F1 + F2 |
| R287 | 2 | Grommet | |
| X699F | | Electric Washer Kit | |
| X699AF | | Switch (for X699F) | |
| X701 | 1 | Foot Valve | |
| X702 | 1 | Push Pump (replacement) | |
| X704 | | Tubing 6mm (per metre) | |
| X705 | | Tubing 5mm (per metre) | |
| X706 | 1 | 3 way Connector | |
| X707F | 2 | Jet Assembly | A56/MO56 |
| X708 | 2 | Jet Assembly | MG34/R67/W1516 |
| X800C | 1 | Bracket | MG34/R67/W1516 |
| X800D | 1 | Cap | MG34/R67/W1516 |
| X800F | 1 | Glass Bottle | MG34/R67/W1516 |
| X801C | 1 | Bracket | MG34/R67/W1516 |
| X801D | 1 | Cap | MG34/R67/W1516 |
| X801F | 1 | Plastic Bottle | MG34/R67/W1516 |
| X802 | 1 | Chrome button | MG34/R67/W1516 |
| X802B | 1 | Valve | Late W16 |
| X803A | 1 | Bottle | A56/MO56 |
| X803C | 1 | Bracket | A56/MO56 |
| X803D | 1 | Cap | A56/MO56 |
| X803Z | 1 | Bottle + Bracket (repl) | A56/MO56 |
| X810A | 1 | Diaphragm (exch) | MG34/R67/W1516 |
| | | *Brass Feed Pipe* | |
| X810B | 1 | Diaphragm (exch) | MG4/R7/W16 |
| | | *Plastic Feed Pipe* | |
| X810C | 1 | Diaphragm (exch) | MG3/R7/W16 |
| | | *Fitted with X801D* | |

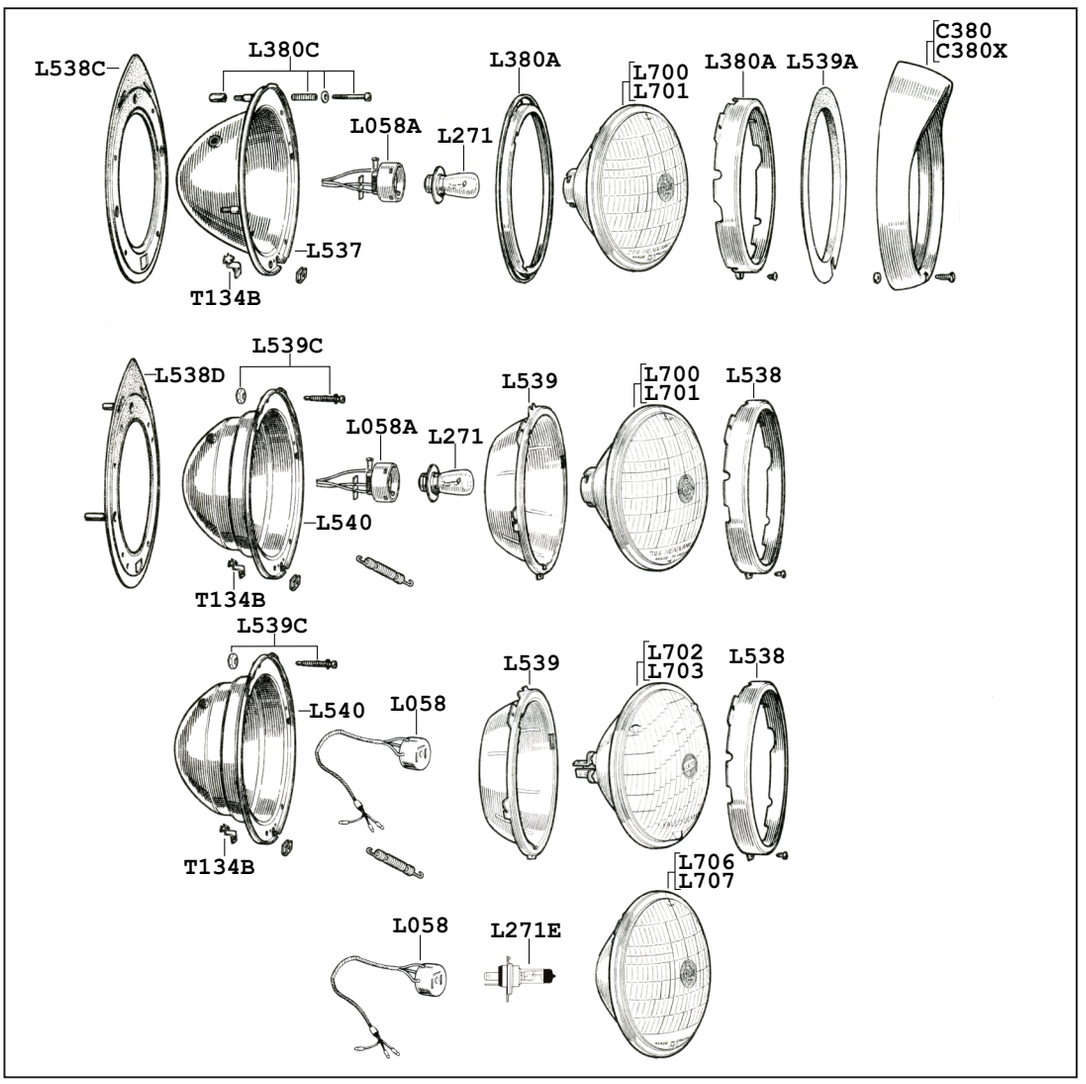


| | | | |
|---|---|---|---|
| C380 | 2 | Chrome Bezel - N.O.S. | |
| C380X | 2 | Chrome Bezel - Recon (Ex*) | |
| L058 | 2 | Harness - Sealed Beam | F2 |
| L058A | 2 | Harness - B.P.F unit | F1 |
| L271 | 2 | Bulb 50/40W B.P.F. | F1 |
| L271E | 2 | Bulb 60/55W Halogen | |
| L380A | 2 | Inner Rim + Plate | F1 |
| L380C | 2 | Adjuster Kit - 3 Point | F1 |
| L537 | 2 | Metal Shell - 3 Point | F1 |
| L538 | 2 | Inner Rim - 2 point | F2 |
| L538C | 2 | Rubber Seal - Wing | F2 |
| L538D | 2 | Rubber Seal - Wing | F1 |
| L539 | 2 | Adjuster Bowl | F2 |
| L539A | 2 | Rubber Dust Excluder | |
| L539C | 2 | Adjuster Kit - 2 Point | F2 |
| L540 | 2 | Metal Shell - 2 Point | F2 |
| L700 | 2 | Light Unit RHD B.P.F. | F1 |
| L701 | 2 | Light Unit LHD B.P.F. | F1 |
| L702 | 2 | Light Unit RHD Sealed Beam | F2 |
| L703 | 2 | Light Unit LHD Sealed Beam | F2 |
| L706 | 2 | Light Unit - H4 RHD | |
| L707 | 2 | Light Unit - H4 LHD | |
| L708 | 1 | Halogen Upgrade Kit RHD * | |
| L709 | 1 | Halogen Upgrade Kit LHD * | |
| | | **Includes 2 H4 light units & 2 Halogen bulbs* | |
| T134B | 2 | Clip - Chrome Retainer | |

*Very early 1622 vehicles had the 3 point adjuster as standard but your vehicle may have been altered in its lifetime, so it is quite possible you will find a later 2 point adjuster set on an earlier car & vice versa!*

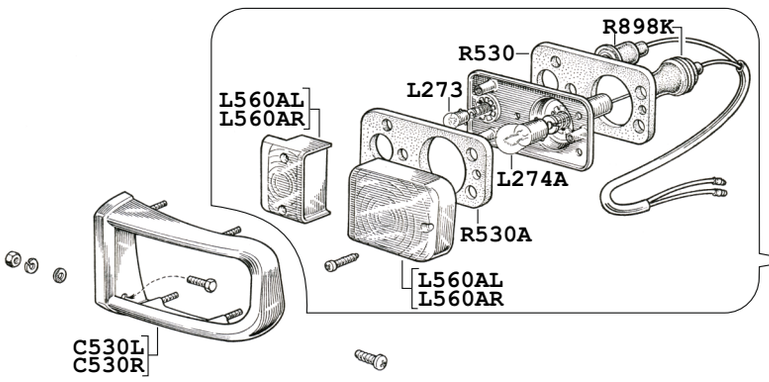


**A55 Mk2 & Morris Oxford Series 5**

| | | |
|---|---|---|
| C530L | Chrome Surround LH | 1 |
| C530R | Chrome Surround RH | 1 |
| L273 | Bulb – Side | 2 |
| L274A | Bulb – Flasher | 2 |
| L560AL | Lens – Side + Flasher LH | 2 |
| L560AR | Lens – Side + Flasher RH | 2 |
| L560L | Lamp – Complete LH | 1 |
| L560R | Lamp – Complete RH | 1 |
| R530 | Gasket – Lamp | 2 |
| R530A | Gasket – Lens | 2 |
| R898K | Boot Kit (4 Piece) | 1 |

**A60 & Morris Oxford Series 6**

| | | |
|---|---|---|
| L273 | Bulb – Side | 2 |
| L274A | Bulb – Flasher | 2 |
| L530 | Lamp – Complete | 2 |
| L530A | Lens – Side + Flasher | 2 |
| R896 | Gasket – Lamp | 2 |
| R896A | Gasket – Lens | 2 |
| R898K | Boot Kit (4 Piece) | 1 |

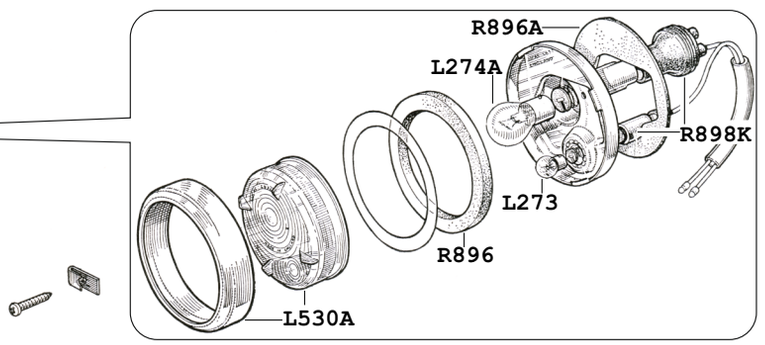


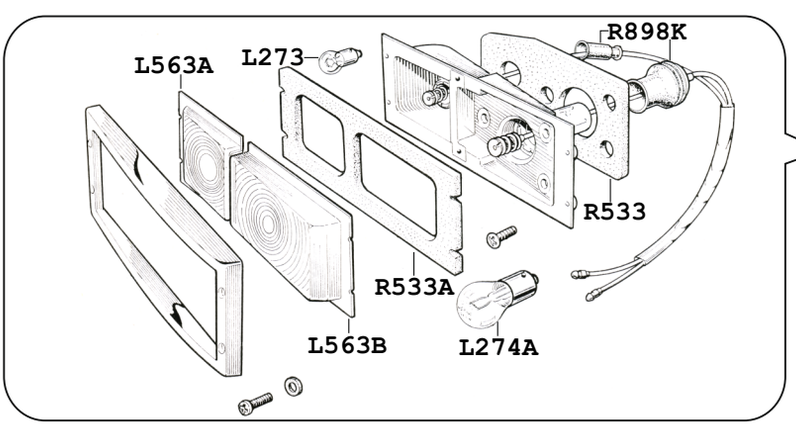


**Riley 4/68 & 4/72**

| | | |
|---|---|---|
| L273 | Bulb – Side | 2 |
| L274A | Bulb – Flasher | 2 |
| L563 | Lamp – Complete | 2 |
| L563A | Lens – Side | 2 |
| L563B | Lens – Flasher | 2 |
| R533 | Gasket – Lamp | 2 |
| R533A | Gasket – Lens | 2 |
| R898K | Boot Kit (4 Piece) | 1 |

**MG Mk3, Mk4 & Wolseley 15/60, 16/60**

| | | |
|---|---|---|
| L273 | Bulb – Side | 2 |
| L274A | Bulb – Flasher | 2 |
| L562AL | Lens – Flasher LH | 1 |
| L562AR | Lens – Flasher RH | 1 |
| L562L | Lamp – Complete LH | 1 |
| L562R | Lamp – Complete RH | 1 |
| L562BL | Lens – Side LH | 1 |
| L562BR | Lens – Side RH | 1 |
| R532 | Gasket – Lamp | 2 |
| R532A | Gasket – Lens | 2 |
| R898K | Boot Kit (4 Piece) | 1 |

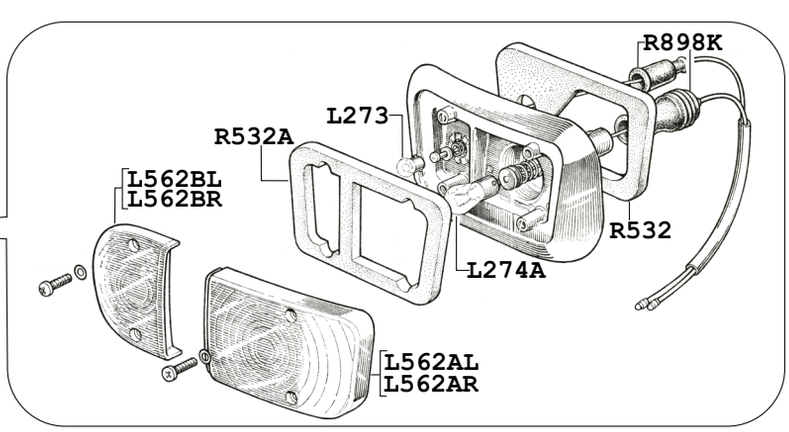

**Austin A55 Mk2**

| | |
|---|---|
| C540FA | Chrome Trim - Top |
| C540FB | Chrome Trim - Bottom |
| C540FX | Finned Finisher |
| L274 | Bulb - Stop/Tail |
| L274A | Bulb – Flasher |
| L570 | Lamp Unit |
| L570B | Lens - Flasher |
| L570C | Lens - Stop/Tail |
| L570K | Chrome Base |
| R540 | Gasket - Lamp Seat |
| R540A | Gasket - Lens Seat |

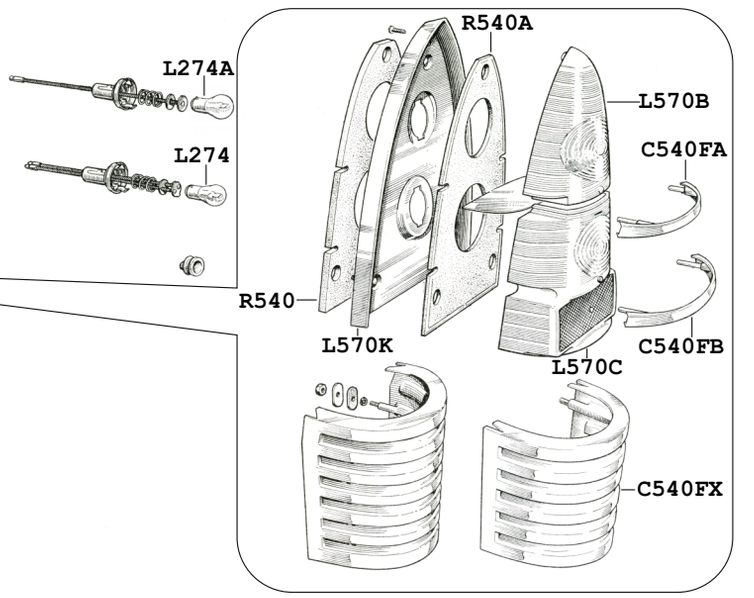


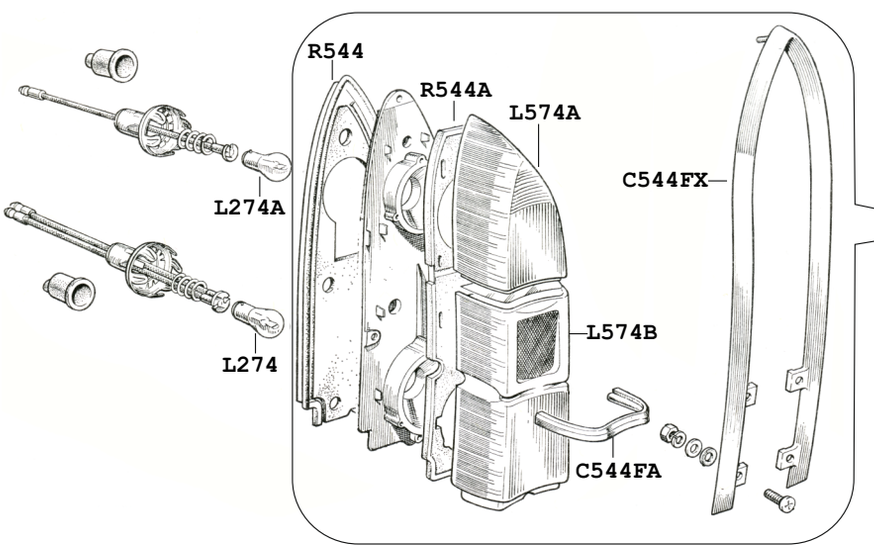


**Austin A60**

| | |
|---|---|
| C544FA | Chrome Trim |
| C544FX | Chrome Bezel |
| L274 | Bulb - Stop/Tail |
| L274A | Bulb – Flasher |
| L574 | Lamp Unit |
| L574A | Lens - Flasher |
| L574B | Lens - Stop/Tail |
| R544 | Gasket - Lamp Seat |
| R544A | Gasket - Lens Seat |

**Morris Oxford Series 5**

| | |
|---|---|
| C541FA | Chrome Trim |
| L274 | Bulb - Stop/Tail |
| L274A | Bulb - Flasher |
| L496FA | Reflector |
| L571 | Lamp Unit |
| L571A | Lens - Flasher |
| L571B | Lens - Stop/Tail |
| L571C | Lens - Reverse |
| L571K | Chrome Base |
| R541 | Gasket - Lamp Seat |
| R541A | Gasket - Lens Seat |

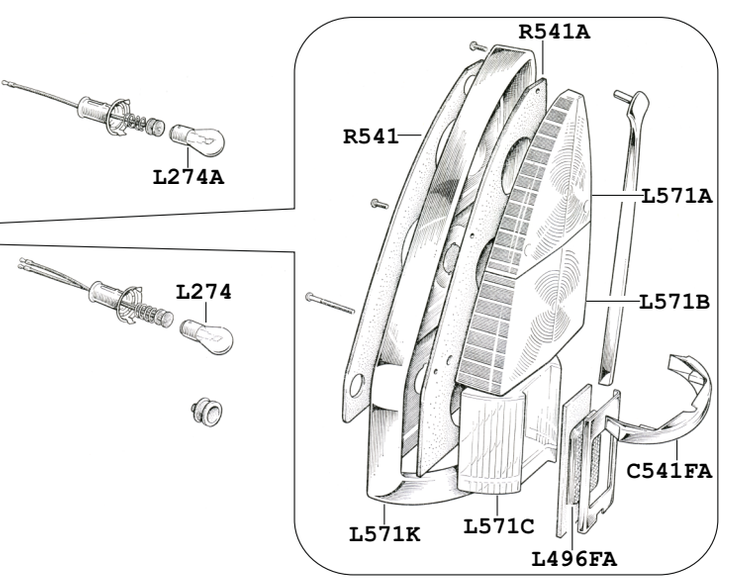

**Morris Oxford Series 6**

| | |
|---|---|
| C544FA | Chrome Trim |
| C544FX | Chrome Bezel |
| L274 | Bulb - Stop/Tail |
| L274A | Bulb - Flasher |
| L575 | Lamp Unit |
| L575A | Lens - Flasher |
| L575B | Lens - Stop/Tail |
| R545 | Gasket – Lamp Seat |
| R545A | Gasket – Lens Seat |

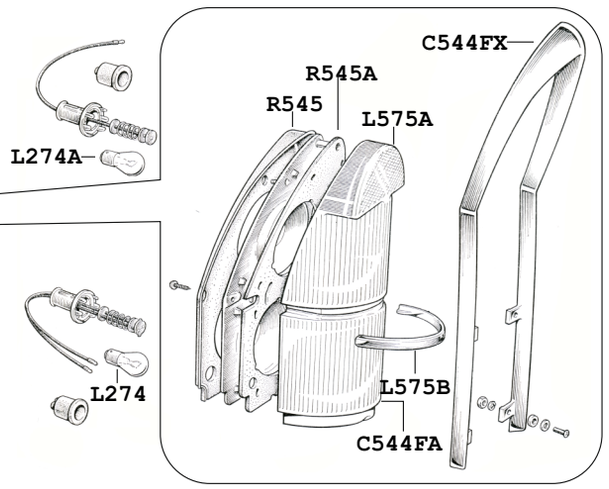


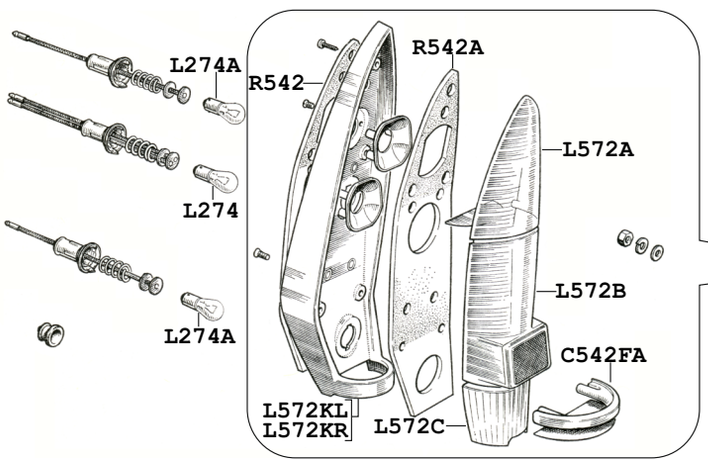


**Wolseley 15/60**

| | |
|---|---|
| C542FA | Chrome Trim |
| L274 | Bulb - Stop/Tail |
| L274A | Bulb - Flasher + Reverse |
| L572KL | Chrome Base L/H |
| L572KR | Chrome Base R/H |
| L572L | Lamp Unit L/H |
| L572R | Lamp Unit R/H |
| L572A | Lens - Stop/Tail |
| L572B | Lens - Flasher |
| L572C | Lens - Reverse |
| R542 | Gasket - Lamp Seat |
| R542A | Gasket - Lens Seat |

**Wolseley 16/60**

| | |
|---|---|
| C546FA | Chrome Trim |
| C546FX | Chrome Bezel |
| L274 | Bulb - Stop/Tail |
| L274A | Bulb - Flasher + Reverse |
| L496FA | Reflector |
| L496FC | Chrome Surround |
| L576 | Lamp Unit |
| L576A | Lens - Flasher |
| L576B | Lens - Stop/Tail |
| L576C | Lens - Reverse |
| R546 | Gasket - Lamp Seat |
| R546A | Gasket - Lens Seat |

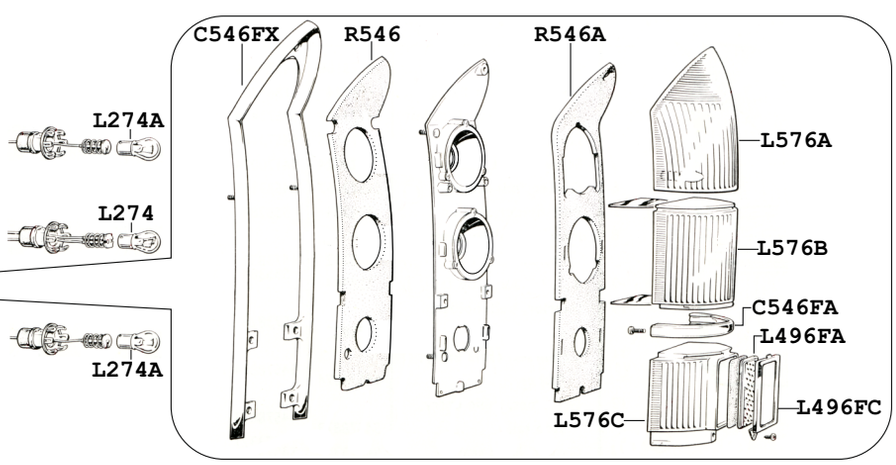


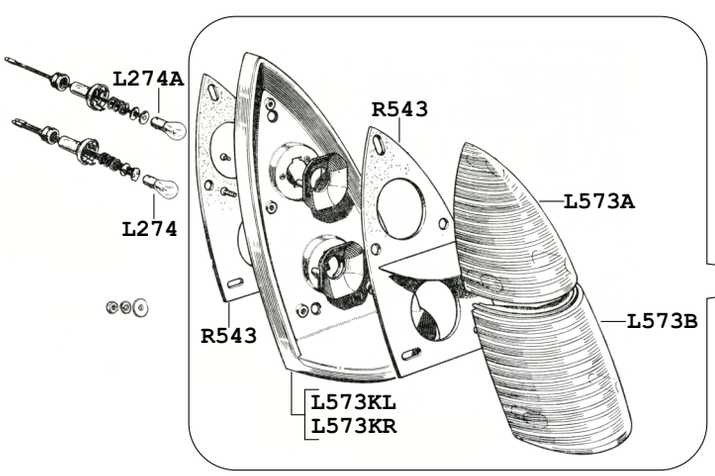


**MG &Riley**

| | |
|---|---|
| L274 | Bulb - Stop/Tail |
| L274A | Bulb - Flasher |
| L573A | Lens - Flasher |
| L573B | Lens - Stop/Tail |
| L573KL | Chrome Base L/H |
| L573KR | Chrome Base R/H |
| L573L | Lamp Unit L/H |
| L573R | Lamp Unit R/H |
| R543 | Gasket - Lamp + Lens Seat |

# Auxiliary Lamps

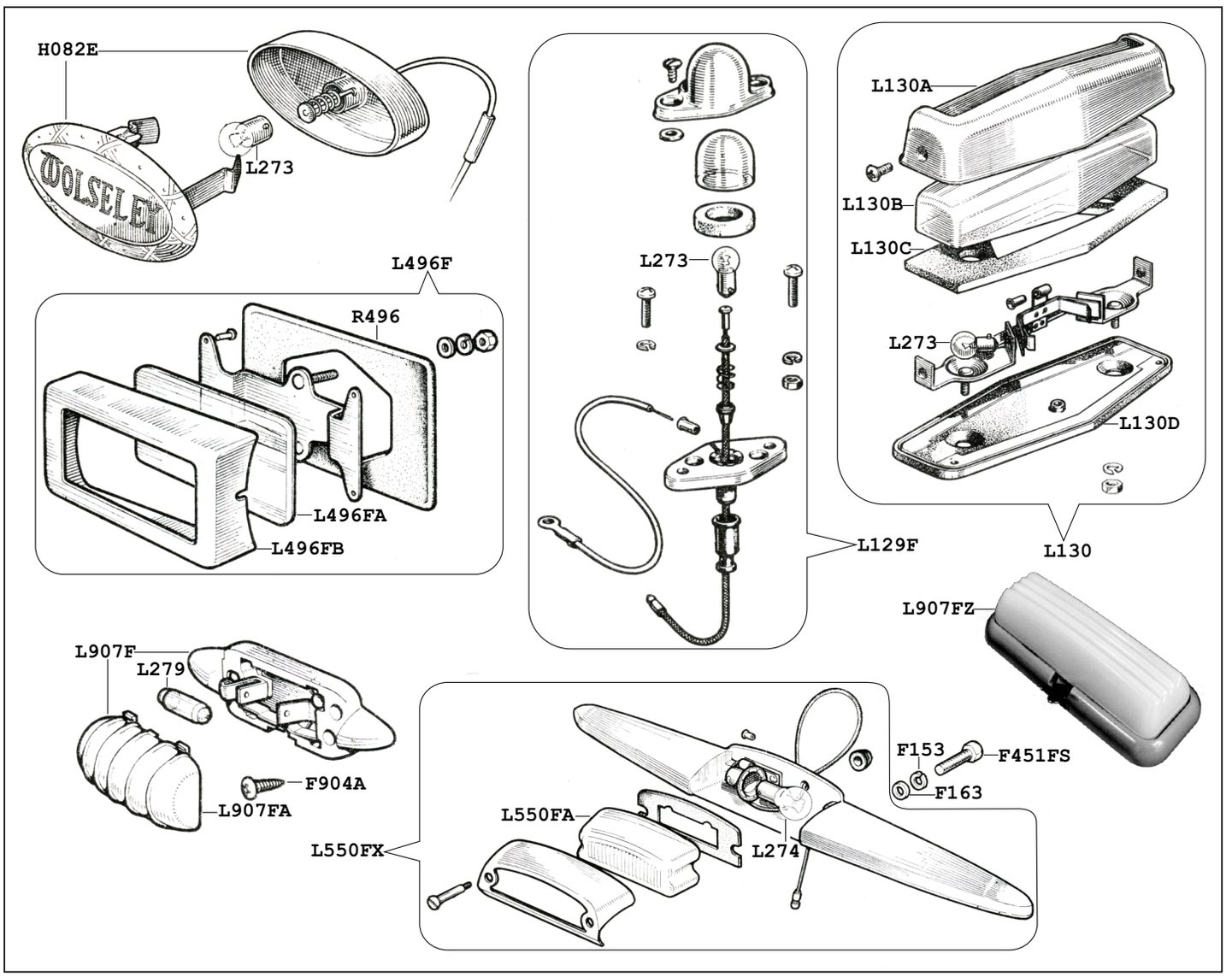


| | | | |
|---|---|---|---|
| F153 | | 1/4" Spring Washer | |
| F163 | | 1/4" Plain Washer | |
| F451FS | | 1/4" x 1/2" UNF Setscrew | |
| F904A | | 6 x 3/4" Csk Pozi ST Screw | |
| | | | |
| H082E | 1 | Badge/Lamp Front Grille | W15 W16 |
| | | | |
| L129F | 1 | Lamp - Number Plate | F1 |
| L130 | 1 | Number Plate Lamp | Late F1 + F2 |
| L130A | 1 | Chrome Cover | Late F1 + F2 |
| L130B | 1 | Glass Lens | Late F1 + F2 |
| L130C | 1 | Foam Gasket | Late F1 + F2 |
| L130D | 1 | Rubber Gasket | Late F1 + F2 |
| L273 | | Bulb | All |
| L274 | 2 | Bulb | MG34/R67 |
| L279 | | Bulb | All |
| L496F | 2 | Reflector & Surround | MG34/R67 |
| L496FA | 2 | Reflector | MO5/W16/MG34/R67 |
| L496FB | 2 | Chrome Surround | MG34/R67 |
| L550FA | 1 | Lens - Reverse Lamp | MG34/R67 |
| L550FX | 1 | Reverse Lamp | MG34/R67 |
| L907F | | Interior Lamp | All |
| L907FA | | Lens - Interior Lamp | All |
| L907FZ | | Interior Lamp (Replacement) | All |
| | | | |
| R496 | 2 | Gasket | MG34/R67 |

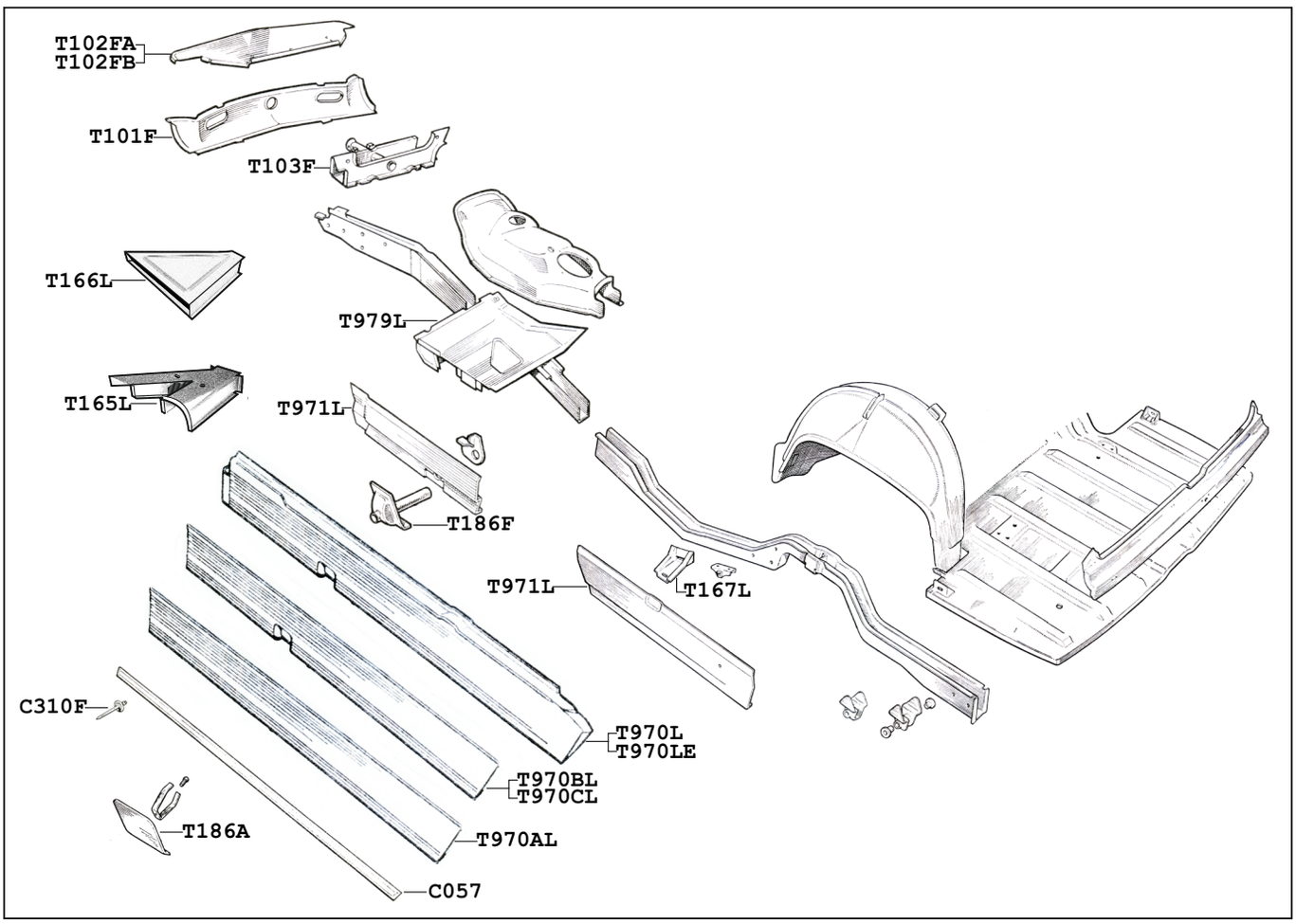


| | | | |
|---|---|---|---|
| C057 | 2 | Trim Strip | MO5/MO6 |
| C310F | | Clip - Trim Strip | MO5/MO6 |
| | | | |
| T101F | 1 | Valance - Front Lower | All |
| T102FA | 1 | Top Plate - Valance | F1+MG4/R7/W16 |
| T102FB | 1 | Top Plate - Valance | A6/MO6 |
| T103F | 1 | Cross Member Assembly | All |
| T165L | 1 | Outrigger LH (original) | All |
| T165R | 1 | Outrigger RH (original) | All |
| T166L | 1 | Outrigger LH (replacement) | All |
| T166R | 1 | Outrigger RH (replacement) | All |
| T167L | 1 | Outrigger LH | All |
| T167R | 1 | Outrigger RH | All |
| T186A | 2/4 | Cover - Jack Point | All |
| T186F | 2/4 | Tube Assy. (Jack Point) | All |
| T970AL | 1 | Sill Cover - No Jack Point | All Saloons |
| T970AR | 1 | Sill Cover - No Jack Point | All Saloons |
| T970BL | 1 | Sill Cover - Jack Point | All Saloons |
| T970BR | 1 | Sill Cover - Jack Point | All Saloons |
| T970CL | 1 | Sill Cover - Jack Point | Estate |
| T970CR | 1 | Sill Cover - Jack Point | Estate |
| T970L | 1 | Outer Sill LH | All Saloons |
| T970LE | 1 | Outer Sill LH | Estates |
| T970R | 1 | Outer Sill RH | All Saloons |
| T970RE | 1 | Outer Sill RH | Estates |
| T971L | 1 | Inner Sill (2 Piece) | All |
| T971R | 1 | Inner Sill (2 Piece) | All |
| T979L | 1 | Floor Panel LH | All |
| T979R | 1 | Floor Panel RH | All |

# Front Wings

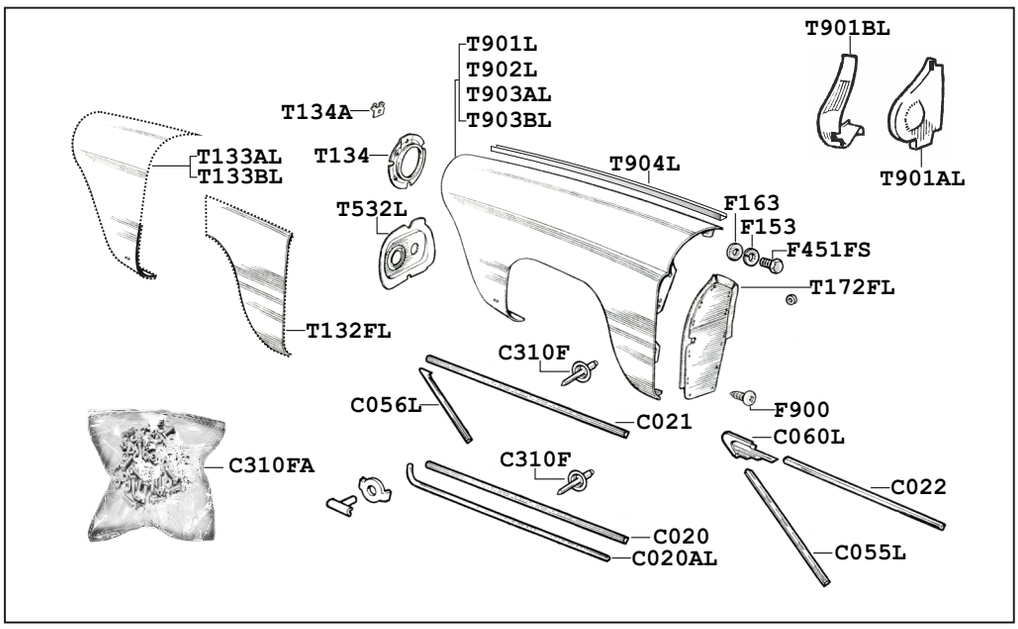


| | | | |
|---|---|---|---|
| C020 | 2 | Upper Trim | A6 |
| C020AL | 1 | Lower Trim LH | A6 |
| C020AR | 1 | Lower Trim RH | A6 |
| C021 | 2 | Trim | MO6/MG34/R6R7/W16 |
| C022 | 2 | Trim | W15 |
| C055L | 1 | Trim LH | W15 |
| C055R | 1 | Trim RH | W15 |
| C056L | 1 | Trim LH | W16 |
| C056R | 1 | Trim RH | W16 |
| C060L | 1 | Trim LH | W15 |
| C060R | 1 | Trim RH | W15 |
| C310F | | Trim Clip | |
| C310FA | 2 | Kit - Trim Fitting | A6 |
| C837 | 1 | Wing Mirrors (Pr) | F1 |
| C838C | 1 | Wing Mirror (Convex) | F2 |
| C838F | 1 | Wing Mirror (Flat) | F2 |
| | | | |
| F153 | 10 | Spring Washer | |
| F163 | 10 | Plain Washer | |
| F451FS | 10 | Setscrew | |
| F900 | 8 | Screw - Splash Plate | MG34/R67 |
| | | | |
| T132FL | 1 | Repair Section LH | |
| T132FR | 1 | Repair Section RH | |
| T133AL | 1 | Repair Section LH | A6/MO6 |
| T133AR | 1 | Repair Section RH | A6/MO6 |
| T133BL | 1 | Repair Section LH | A5/MO5/MG34/R67/W1516 |
| T133BR | 1 | Repair Section RH | A5/MO5/MG34/R67/W1516 |
| T134 | 2 | Support Ring | |
| T134A | 2 | Clip - Chrome Bezel | |
| T172FL | 1 | Splash Plate LH * | MG34/R67 |
| T172FR | 1 | Splash Plate RH * | MG34/R67 |
| | | ** Also fitted to all non UK models* | |
| T532L | 1 | Support - S/Lamp LH | A5/MO5/MG34/R67/W1516 |
| T532R | 1 | Support - S/Lamp RH | A5/MO5/MG34/R67/W1516 |
| T901AL | 1 | Extension LH | A6/MO6 |
| T901AR | 1 | Extension RH | A6/MO6 |
| T901BL | 1 | Closing Panel LH | A6/MO6 |
| T901BR | 1 | Closing Panel RH | A6/MO6 |
| T901L | 1 | Front Wing - Steel | A6/MO6 |
| T901R | 1 | Front Wing - Steel | A6/MO6 |
| T902L | 1 | Front Wing - Steel | A5/MO5/MG34/R67/W1516 |
| T902R | 1 | Front Wing - Steel | A5/MO5/MG34/R67/W1516 |
| T903AL | 1 | Frt Wing - F/Glass | A6/MO6 |
| T903AR | 1 | Frt Wing - F/Glass | A6/MO6 |
| T903BL | 1 | Frt Wing - F/Glass | A5/MO5/MG34/R67/W1516 |
| T903BR | 1 | Frt Wing - F/Glass | A5/MO5/MG34/R67/W1516 |
| T904L | 1 | Repair Channel LH | |
| T904R | 1 | Repair Channel RH | |
| T972AL | 1 | Stiffener Plate LH | |
| T972AR | 1 | Stiffener Plate RH | |

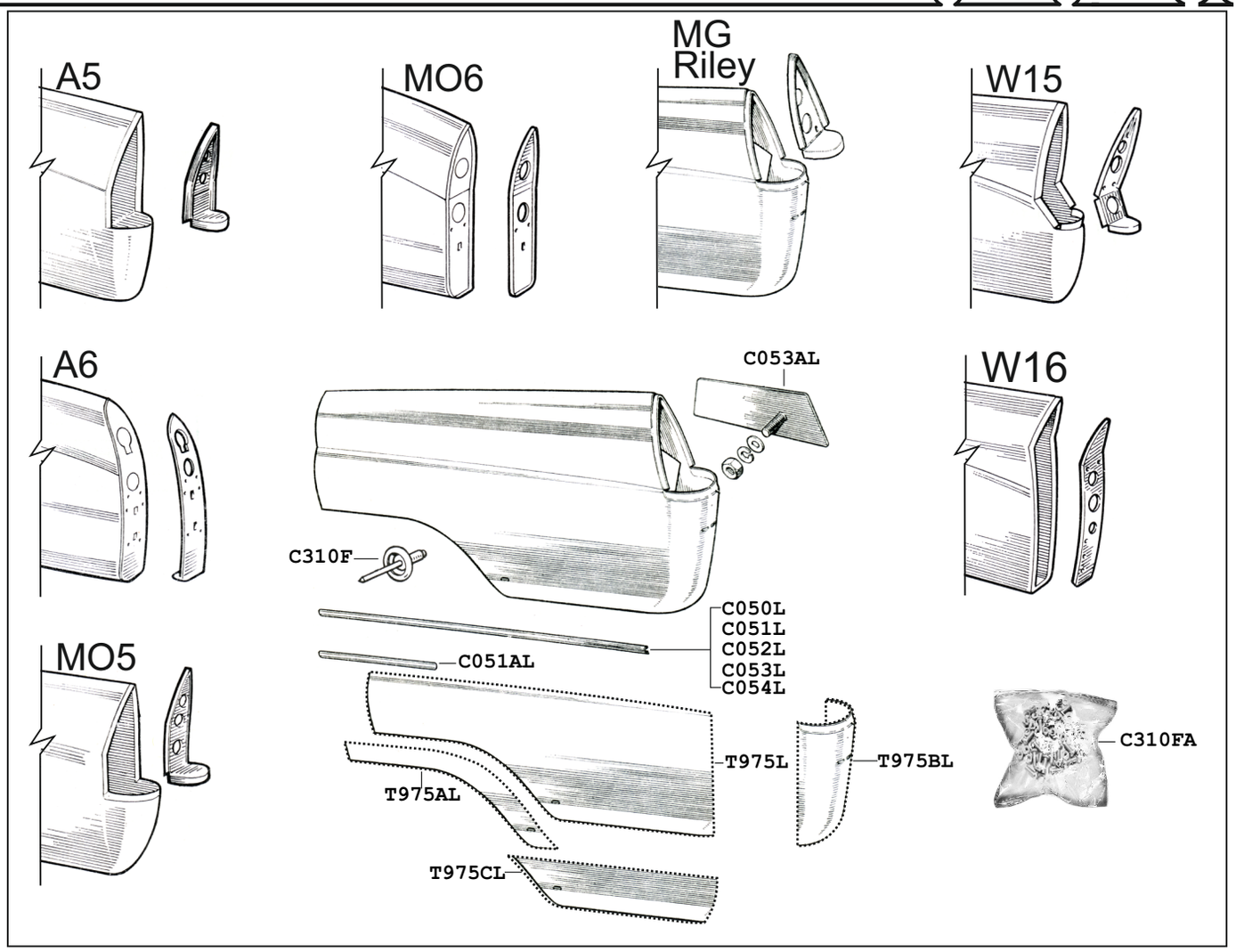


| | | | |
|---|---|---|---|
| C050L | 1 | Trim LH | A5 |
| C050R | 1 | Trim RH | A5 |
| C051AL | 1 | Trim LH | A6 |
| C051AR | 1 | Trim RH | A6 |
| C051L | 1 | Trim LH | A6 |
| C051R | 1 | Trim RH | A6 |
| C052L | 1 | Trim LH | MO6/W16 |
| C052R | 1 | Trim RH | MO6/W16 |
| C053AL | 1 | Trim LH | MG34/R67 |
| C053AR | 1 | Trim RH | MG34/R67 |
| C053L | 1 | Trim LH | MG34/R67 |
| C053R | 1 | Trim RH | MG34/R67 |
| C054L | 1 | Trim LH | W15 |
| C054R | 1 | Trim RH | W15 |
| C310F | | Trim Clip | All |
| C310FA | | Kit - Trim Fitting (x 20) | A6 |
| | | | |
| T975AL | 1 | Wheel Arch LH | All |
| T975AR | 1 | Wheel Arch RH | All |
| T975BL | 1 | Repair Section LH | A5/M05/MG34/R67/W15 |
| T975BR | 1 | Repair Section RH | A5/M05/MG34/R67/W15 |
| T975CL | 1 | 1/4 Rear Wing LH | All |
| T975CR | 1 | 1/4 Rear Wing RH | All |
| T975L | 1 | 1/2 Rear Wing LH | All |
| T975R | 1 | 1/2 Rear Wing RH | All |

# Bonnet Assembly

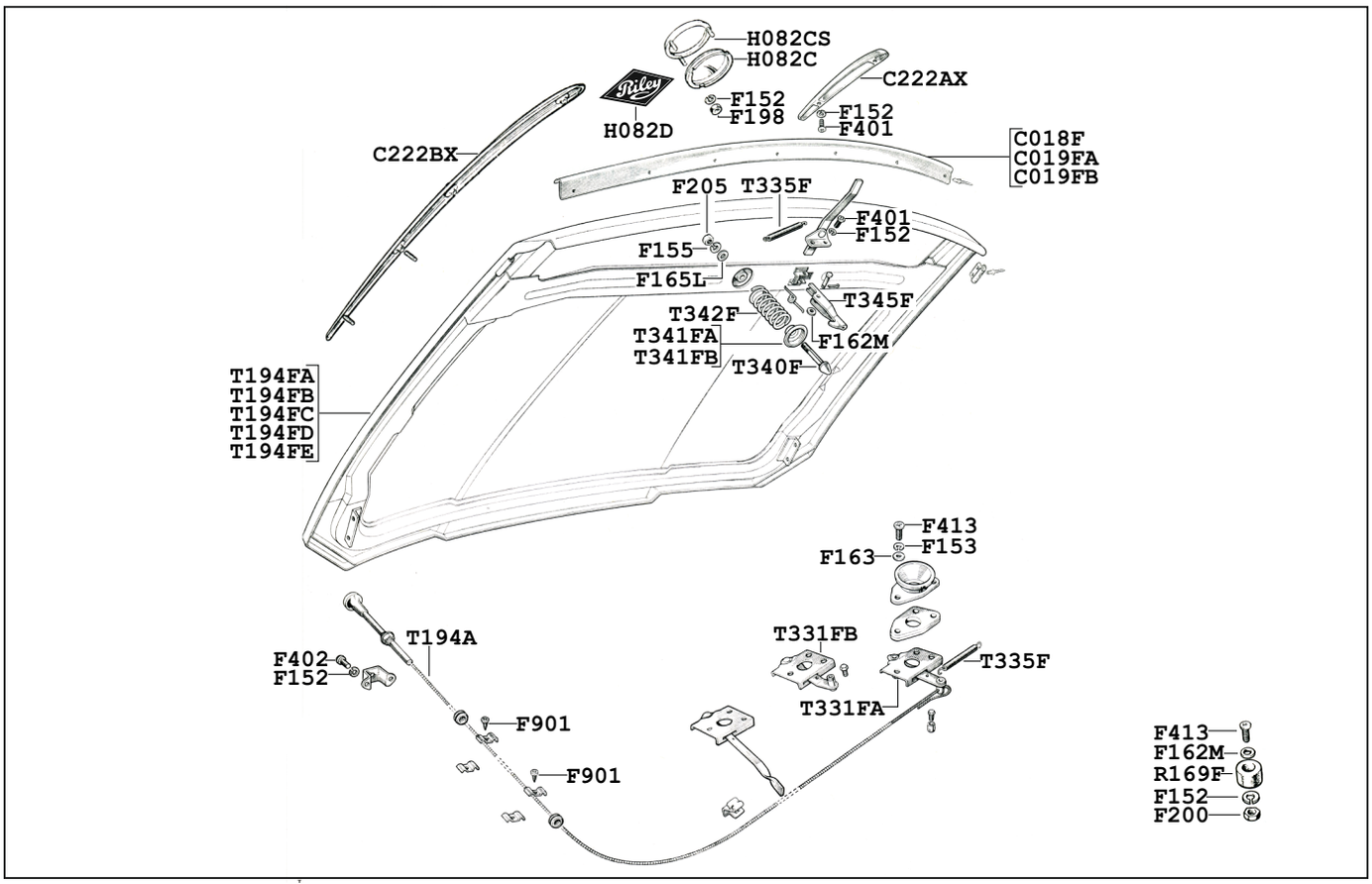


| | | | |
|---|---|---|---|
| C018F | 1 | Chrome Finisher | A5/6 |
| C019FA | 1 | Chrome Finisher | MO5 |
| C019FB | 1 | Chrome Finisher | MO6 |
| C222AX | 1 | Chrome Strip - Centre | A5/6 |
| C222BX | 1 | Chrome Strip - Centre | MO5/6 |

| | |
|---|---|
| F152 | Spring Washer 3/16” |
| F153 | Spring Washer 1/4" |
| F155 | Spring Washer 3/8” |
| F162M | Plain Washer 3/16” x 3/4" OD |
| F163 | Plain Washer 1/4" |
| F165L | Plain Washer 3/8” x 1” OD |
| F198 | Plain Nut 6.32 UNC x 1/4" OD |
| F200 | Plain Nut 10.32 UNF x 5/16” OD |
| F205 | Plain Nut 3/8” |
| F401 | Panhead Screw 3/16” x 3/8” UNF |
| F402 | Panhead Screw 3/16” x 1/2” UNF |
| F413 | Panhead Screw 1/4" x 5/8” UNF |
| F901 | Panhead S.T. Screw 6” x 3/8” |

| | | | |
|---|---|---|---|
| H082C | 1 | Badge “Morris” | MO5/6 |
| H082CS | 1 | Surround Badge | MO5/6 |
| H082D | 1 | Badge “Riley” | R6/7 |
| R169F | 2 | Rubber Buffer | |
| T194A | 1 | Release Cable | |
| T194FA | 1 | Bonnet | A5/6 |
| T194FB | 1 | Bonnet | MO5/6 |
| T194FC | 1 | Bonnet | MG3/4 |
| T194FD | 1 | Bonnet | R6/7 |
| T194FE | 1 | Bonnet | W15/16 |
| T331FA | 1 | Catch Plate | Early F1 |
| T331FB | 1 | Catch Plate | Late F1 + F2 |
| T335F | 1 | Spring - Safety Catch | |
| T340F | 1 | Pin - Catch | |
| T341FB | 1 | Thimble/Cup - Catch | |
| T342F | 1 | Spring - Release | |
| T345F | 1 | Hook - Catch | |

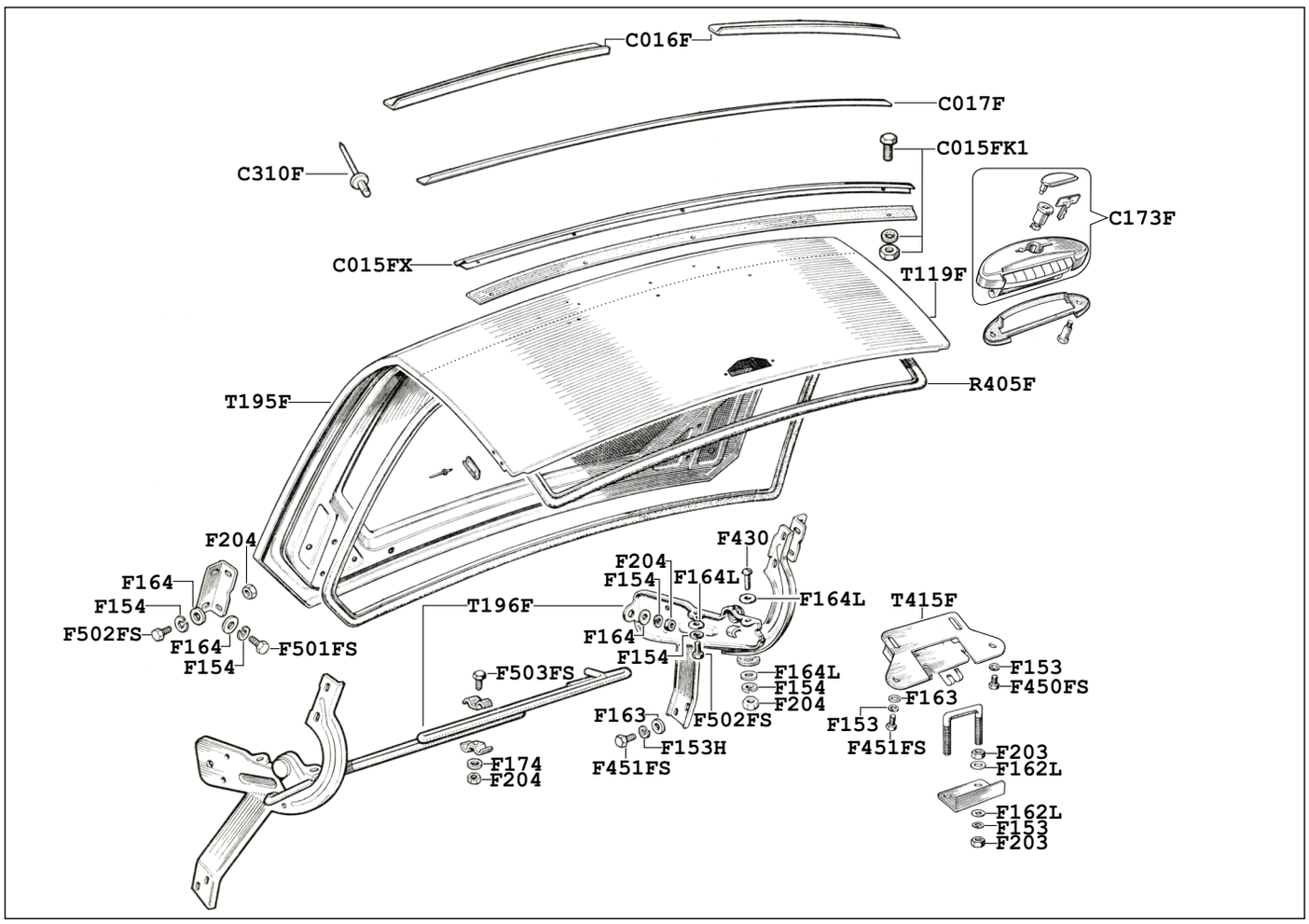


**Boot Assembly**

| | | | |
|---|---|---|---|
| C015FK1 | 1 | Fixing Kit – Chrome Strip | A5/6 MO5/6 |
| C015FX | 1 | Chrome Strip | A5/6 MO5/6 |
| C016F | 2 | Chrome Strip L & R | MG3/4 R6/7 |
| C017F | 1 | Chrome Strip | W15/16 |
| C173F | 1 | Handle + Lock + Key | |
| C310F | | Clip - Chrome Trim | MG3/4 R6/7 W15/16 |

| | |
|---|---|
| F153 | Spring Washer 1/4" |
| F153H | Spring Washer 1/4" Heavy Duty |
| F154 | Spring Washer 5/16” |
| F162L | Plain Washer 3/16” x 1/2" OD |
| F163 | Plain Washer 1/4" |
| F164 | Plain Washer 5/16” |
| F164L | Plain Washer 5/16” x 1” OD |
| F174 | Internal Star Washer 5/16” |
| F203 | Plain Nut 1/4” UNF |
| F204 | Plain Nut 5/16” UNF |
| F430 | Screw 5/16” x 3/4" UNF Panhead |
| F450FS | Set Screw 1/4" UNF x 3/8” |
| F451FS | Set Screw 1/4" UNF x 1/2" |
| F501FS | Set Screw 5/16” UNF x 1/2" |
| F502FS | Set Screw 5/16” UNF x 5/8” |
| F503FS | Set Screw 5/16” UNF x 3/4" |

| | |
|---|---|
| R405F | Rubber Seal |

| | |
|---|---|
| T119F | Repair Panel - Bottom |
| T195F | Lid Assembly |
| T196F | Hinge Assembly |
| T415F | Latch Assembly |

**Boot Badges**

| | | |
|---|---|---|
| H461A | Austin | A5/A6 |
| H461B | Cambridge | A5/A6 |
| H462 | Star | Early A5 |
| H465 | Morris Oxford | MO5/MO6 |
| H467 | MG Magnette | MG3/MG4 |
| H468 | Riley 4/68 | R6 |
| H469 | Riley 4/72 | R7 |
| H470 | Wolseley 15/60 | W15 |
| H471 | Wolseley 16/60 | W16 |
| H472 | Automatic | |
| H473 | Diesel | |
| H571A | Spire Clip | |
| H571B | Plastic Plug | |

# Front Door

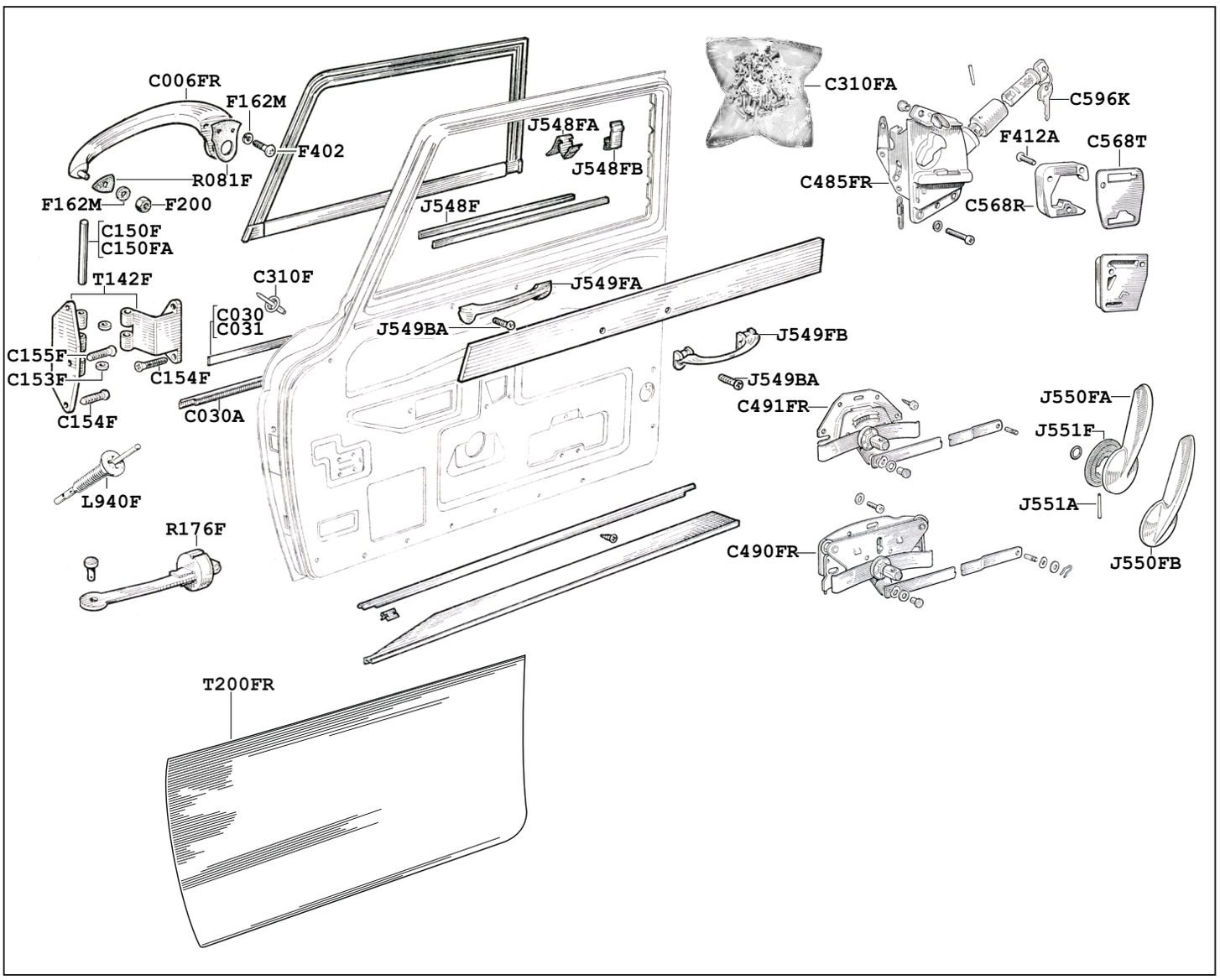


| | | | |
|---|---|---|---|
| C006FL | 2 | Exterior Door Handle LH | |
| C006FR | 2 | Exterior Door Handle RH | |
| C030 | 2 | Trim - Upper | A6 |
| C030A | 2 | Trim - Lower | A6 |
| C031 | 2 | Trim - Upper | MO6/MG34/R67 |
| C150F | 4 | Hinge Pin (Standard) | |
| C150FA | | Hinge Pin (+0.16”) | |
| C153F | 16 | Washer - Hinge Pin | |
| C154F | 20 | Screw - Small | |
| C155F | 2 | Screw - Large | |
| C310F | | Clip - Trim | |
| C310FA | 2 | Kit - Trim Fitting Lower | A6 |
| C485FL | 1 | Door Lock Assembly LH | |
| C485FR | 1 | Door Lock Assembly RH | |
| C490FL | 1 | Regulator - LH | F1 + (Early F2) |
| C490FR | 1 | Regulator - RH | F1 + (Early F2) |
| C491FL | 1 | Regulator - LH | Late F2 |
| C491FR | 1 | Regulator - RH | Late F2 |
| C568L | 2 | Striker LH | |
| C568R | 2 | Striker RH | |
| C568T | 4 | Backing Plate - Striker | F2 |
| C596K | | Key - Cut to Number | |
| C839 | 1 | 1/4 Light Mounting Mirror | |
| | | | |
| F162M | | Plain Washer 3/16” x 3/4" | |
| F200 | | Plain Nut 10.32 UNF | |
| F402 | | Screw 3/16” UNF x 1/2" | |
| F412A | 12 | Screw - Striker | |

| | | | |
|---|---|---|---|
| J548F | 8 | Weatherstrip | |
| J548FA | 24 | Outer Clip - Weatherstrip | |
| J548FB | 32 | Inner Clip - Weatherstrip | |
| J549BA | 4 | Screw - Grab Handle | |
| J549FA | 4/2 | Grab Handle | A56/MO56 |
| J549FB | 4 | Grab Handle | MG34/R67/W1516 |
| J550FA | 4 | Door Handle | A56 |
| J550FB | 4 | Door Handle | MO56/MG34/R67/W1516 |
| J551A | 4 | Pin - Handle | |
| J551F | 2 | Escutcheon - Handle | |
| | | | |
| L940F | 2 | Courtesy Light Switch | |
| | | | |
| R081F | 4 | Gasket Set | |
| R176F | 4 | Buffer - Door Check | |
| | | | |
| T142F | 4 | Door Hinge (Used) | |
| T200FL | 1 | Door Skin LH * | |
| T200FR | 1 | Door Skin RH * | |

** To Chrome Trim Line*

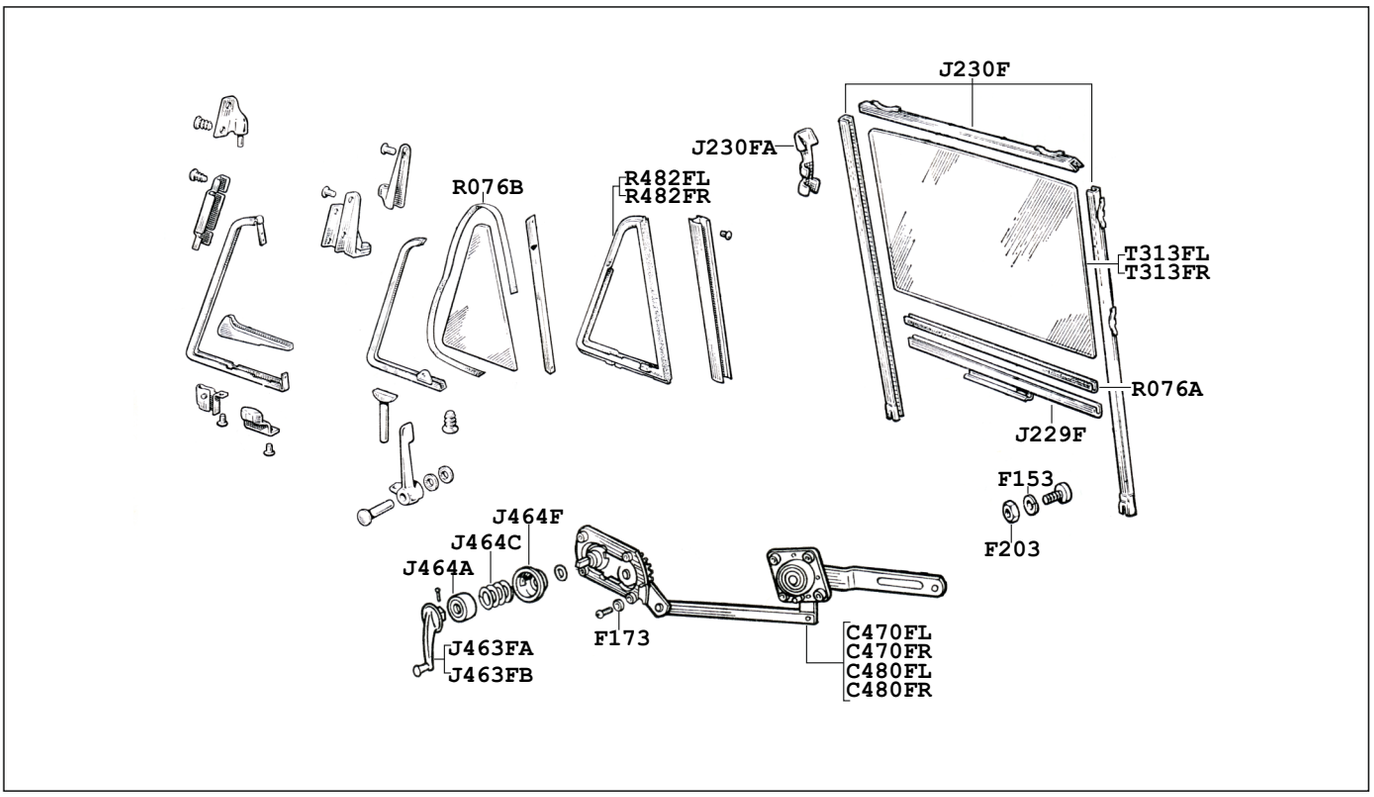


| | | | |
|---|---|---|---|
| C470FL | 1 | Window Regulator LH | F1 |
| C470FR | 1 | Window Regulator RH | F1 |
| C480FL | 1 | Window Regulator LH | F2 |
| C480FR | 1 | Window Regulator RH | F2 |
| | | | |
| F153 | | Spring Washer 1/4" | |
| F173 | | Internal Star Washer 1/4" | |
| F203 | | Plain Nut 1/4" U.N.F | |
| | | | |
| J229F | 2 | Metal Holder - Drop Glass | |
| J230F | 2 | Channel Kit - Front Drop Glass | |
| J230FA | 8 | Spring Clip - Window Channel | |
| J463FA | 2 | Handle - Window Winding | A56 |
| J463FB | 2 | Handle - Window Winding | MO56/MG34/R67/W1516 |
| J464A | 2 | Crown - Winding Handle | |
| J464C | 2 | Spring - Winding Handle | |
| J464F | 2 | Escutcheon - Winding Handle | |
| | | | |
| R076A | 2 | Glazing Rubber - Drop Glass | |
| R076B | 2 | Glazing Rubber - 1/4 Light | |
| R482FL | 1 | Seal - Quarter Light LH | |
| R482FR | 1 | Seal - Quarter Light RH | |
| | | | |
| T313FL | 1 | Drop Glass LH | |
| T313FR | 1 | Drop Glass RH | |

# Rear Door

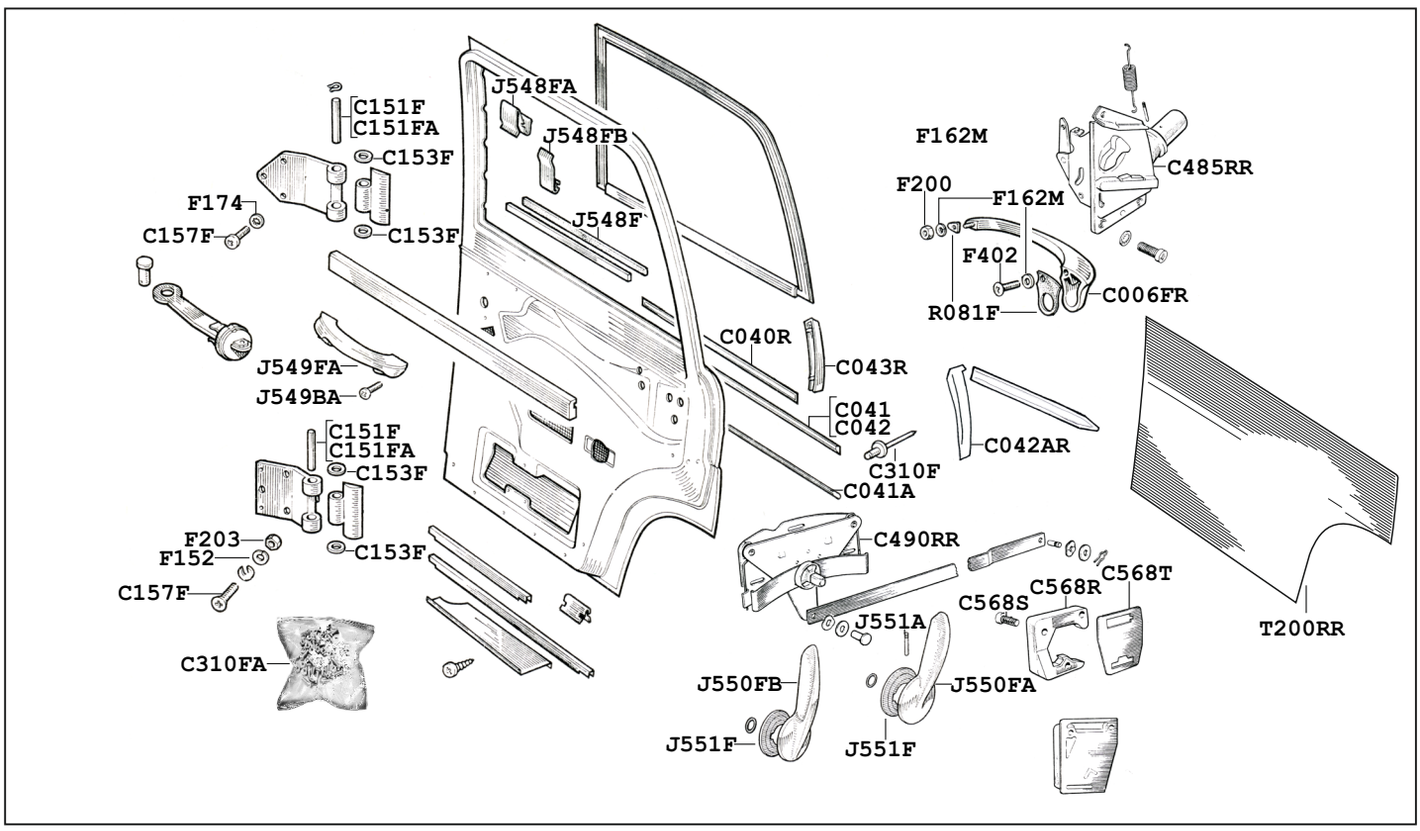


| | | | |
|---|---|---|---|
| C006FL | 1 | Door Handle LH | |
| C006FR | 1 | Door Handle RH | |
| C040L | 1 | Trim LH | A5 |
| C040R | 1 | Trim RH | A5 |
| C041 | 2 | Trim - Upper | A6 |
| C041A | 2 | Trim - Lower | A6 |
| C042 | 2 | Trim | MO6/MG34 |
| C042AL | 1 | Trim LH | MG3 |
| C042AR | 1 | Trim RH | MG3 |
| C043L | 1 | Trim LH | A5 |
| C043R | 1 | Trim RH | A5 |
| C151F | 4 | Hinge Pin STD | |
| C151FA | 4 | Hinge Pin (+0.16”) | |
| C153F | 8 | Washer - Hinge Pin | |
| C156F | 4 | Screw - Bottom Hinge | |
| C157F | 6 | Screw - Top Hinge | |
| C310F | | Fixing Rivet - Trim | |
| C310FA | | Fixing Kit - Lower Trim | |
| C485RL | 1 | Door Lock Assembly RH | |
| C485RR | 1 | Door Lock Assembly RH | |
| C490RL | 1 | Regulator LH | |
| C490RR | 1 | Regulator RH | |
| C568L | 2 | Striker LH | |
| C568R | 2 | Striker RH | |
| C568S | 6 | Screw | |
| C568T | 2 | Backing Plate | |

| | | | |
|---|---|---|---|
| F152 | | Spring Washer 3/16” | |
| F162M | | Plain Washer 3/16” x 3/4" | |
| F174 | | Internal Star Washer 5/16” | |
| F200 | | Plain Nut 10.32 UNF | |
| F203 | | Plain Nut 1/4" UNF | |
| F402 | | Screw 3/16” UNF x 1/2" | |
| | | | |
| J548F | 4 | Weatherstrip | |
| J548FA | 12 | Clip - Outer | |
| J548FB | 16 | Clip - Inner | |
| J549BA | 4 | Screw - Grab Handle | |
| J549FA | 2 | Interior Grab Handle | A56 |
| J550FA | 2 | Interior Door Handle | A56 |
| J550FB | 2 | Interior Door Handle | MO56/MG34/R67/W1516 |
| J551A | 2 | Pin | |
| J551F | 4 | Escutcheon | |
| | | | |
| R081F | 2 | Gasket Set | |
| R176F | 4 | Buffer - Door Check | |
| | | | |
| T200RL | 1 | Door Skin LH * | |
| T200RR | 1 | Door Skin RH * | |
| | | ** To chrome trim line* | |
| T975DL | 1 | Rear Wheel Arch Repair | |
| T975DR | 1 | Rear Wheel Arch Repair | |

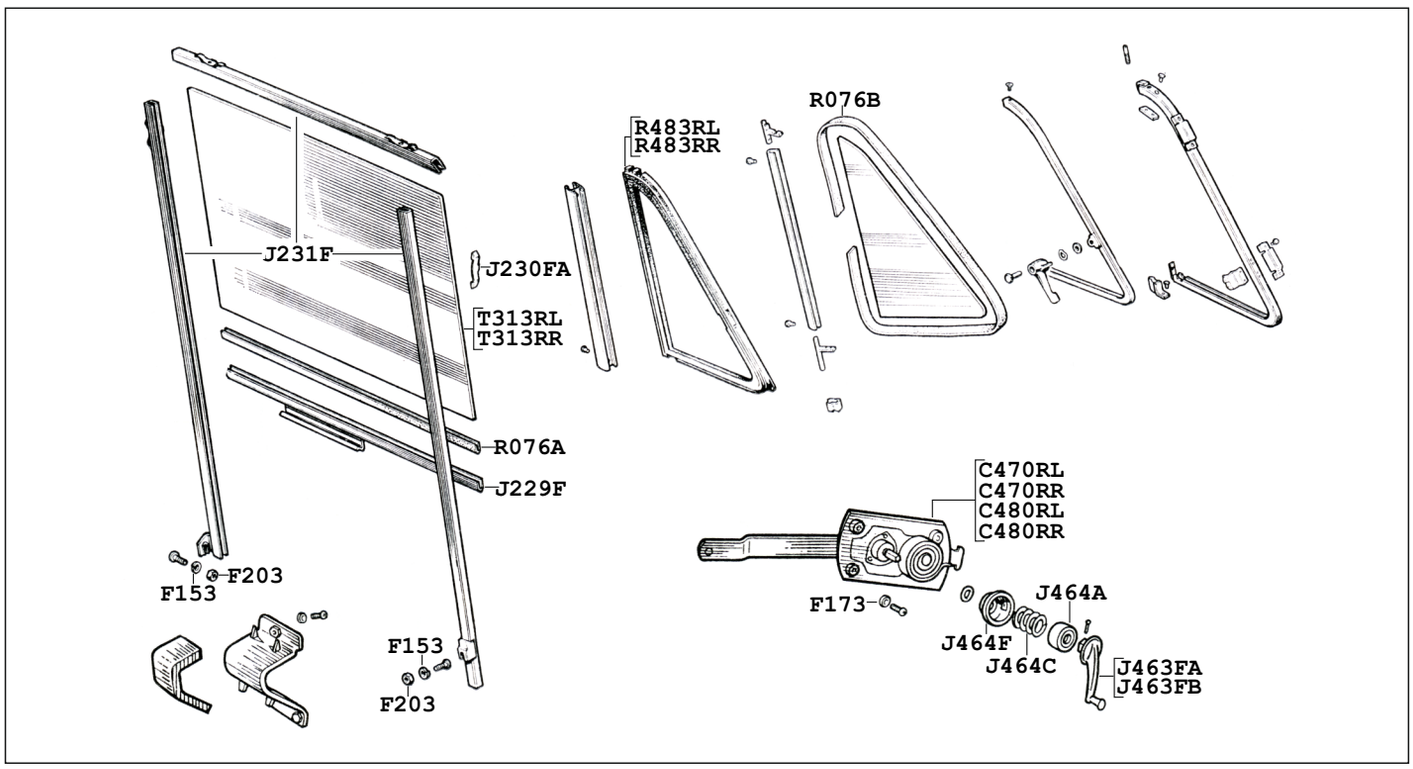


| | | | |
|---|---|---|---|
| C470RL | 1 | Regulator - Window LH | F1 |
| C470RR | 1 | Regulator - Window RH | F1 |
| C480RL | 1 | Regulator - Window LH | F2 |
| C480RR | 1 | Regulator - Window RH | F2 |
| | | | |
| F153 | | Spring Washer 1/4" | |
| F173 | | Internal Star Washer 1/4" | |
| F203 | | Plain Nut - 1/4" UNF | |
| | | | |
| J229F | 2 | Metal Holder - Drop Glass | |
| J230FA | 8 | Spring Clip - Window channel | |
| J231F | 2 | Channel Kit - Drop Glass | |
| J463FA | 2 | Handle - Window Winding | A5/A6 |
| J463FB | 2 | Handle - Window Winding | MO56/MG34/R67/W1516 |
| J464A | 2 | Crown - Winding Handle | |
| J464C | 2 | Spring - Winding Handle | |
| J464F | 2 | Escutcheon - Winding Handle | |
| | | | |
| R076A | 2 | Glazing Rubber - Drop Glass | |
| R076B | 2 | Glazing Rubber - 1/4 Light | |
| R483RL | 1 | Seal - Quarter Light LH | |
| R483RR | 1 | Seal - Quarter Light RH | |
| | | | |
| T313RL | 1 | Glass - Door LH | |
| T313RR | 1 | Glass - Door RH | |

# Front Bumper

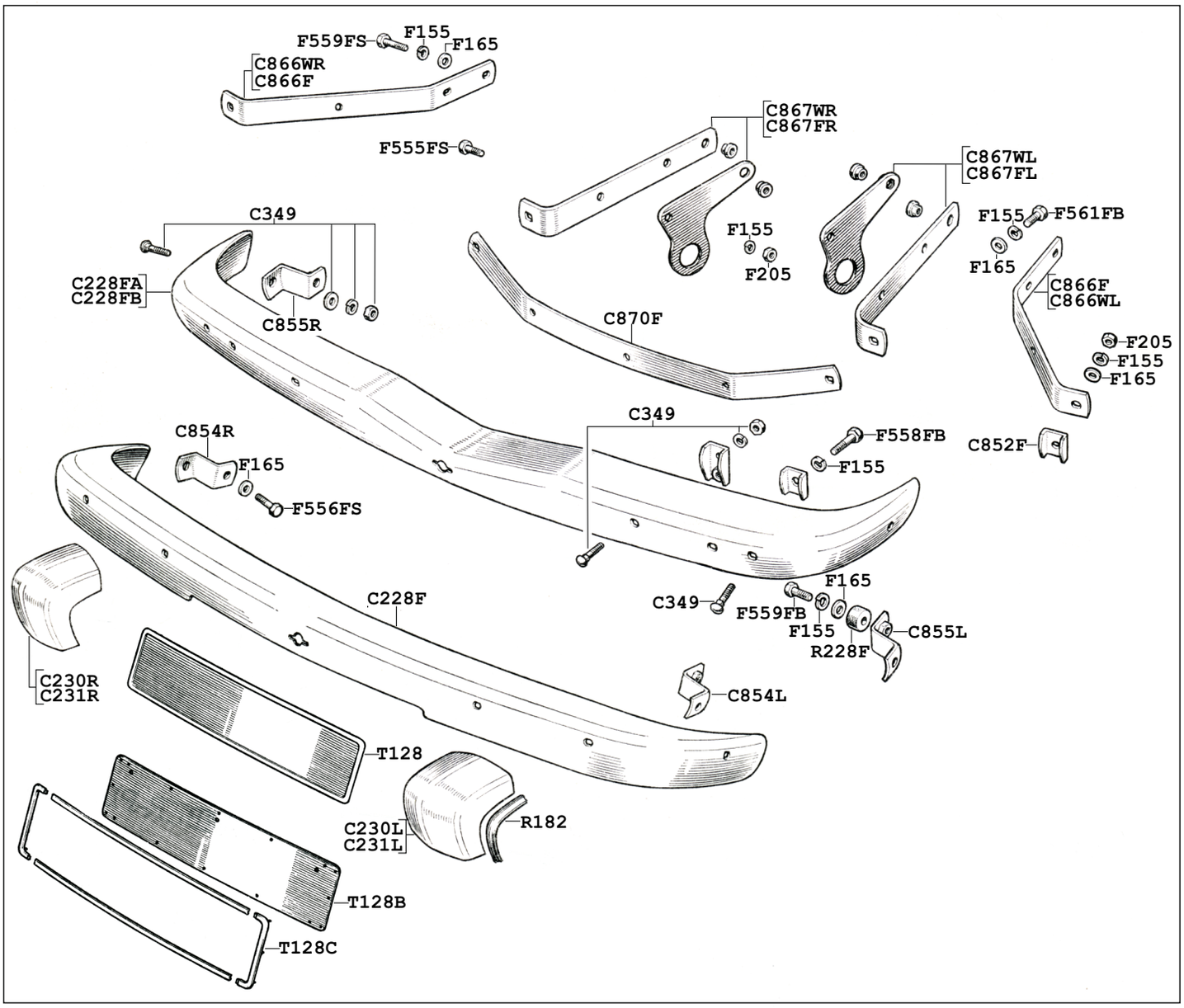


| | | | |
|---|---|---|---|
| C228F | 1 | Bumper Blade | A56/MO56/MG34/R67 |
| C228FA | 1 | Bumper Blade | W15 |
| C228FB | 1 | Bumper Blade | W16 |
| C230L | 1 | Over Rider - LH | A5/MO5/MG34/R67 |
| C230R | 1 | Over Rider - RH | A5/MO5/MG34/R67 |
| C231L | 1 | Over Rider - LH | A6/MO6 |
| C231R | 1 | Over Rider - RH | A6/MO6 |
| C349 | 4 | Chromed Bolt Assy. | |
| C852F | 2 | Bracket - Over Rider | |
| C854L | 1 | Bracket - End LH | A56/MO56/MG34/R67 |
| C854R | 1 | Bracket - End RH | A56/MO56/MG34/R67 |
| C855L | 1 | Bracket - End LH | W15/16 |
| C855R | 1 | Bracket - End RH | W15/16 |
| C866F | 2 | Bracket - Outer | A56/MO56/MG34/R67 |
| C866WL | 1 | Bracket - Outer LH | W15/16 |
| C866WR | 1 | Bracket - Outer RH | W15/16 |
| C867FL | 1 | Bracket - Inner LH | A56/MO56/MG34/R67 |
| C867FR | 1 | Bracket - Inner RH | A56/MO56/MG34/R67 |
| C867WL | 1 | Bracket - Inner LH | W15/16 |
| C867WR | 1 | Bracket - Inner RH | W15/16 |
| C870F | 1 | Support Bar | W15/16 |

| | | |
|---|---|---|
| F155 | | Spring Washer 3/8” |
| F165 | | Plain Washer 3/8” |
| F205 | | Plain Nut 3/8” |
| F555FS | | Set Screw 3/8” x 1” UNF |
| F556FS | | Set Screw 3/8” x 1 1/8” UNF |
| F558FB | | Bolt 3/8” x 1 3/8” UNF |
| F559FB | | Bolt 3/8” x 1 1/2” UNF |
| F559FS | | Set Screw 3/8” x 1 1/2" UNF |
| F561FB | | Bolt 3/8” x 1 3/4" UNF |

| | | | |
|---|---|---|---|
| R182 | 4 | Pad - Over Rider | |
| R228F | 2 | Spacer Rubber - Mount | |

| | | | |
|---|---|---|---|
| T128 | 1 | Panel - Number Plate | A56/MO56 |
| T128B | 1 | Panel - Number Plate | MG34/R67/W15/16 |
| T128C | 1 | Surround - Number Plate | MG34/R67/W15/16 |

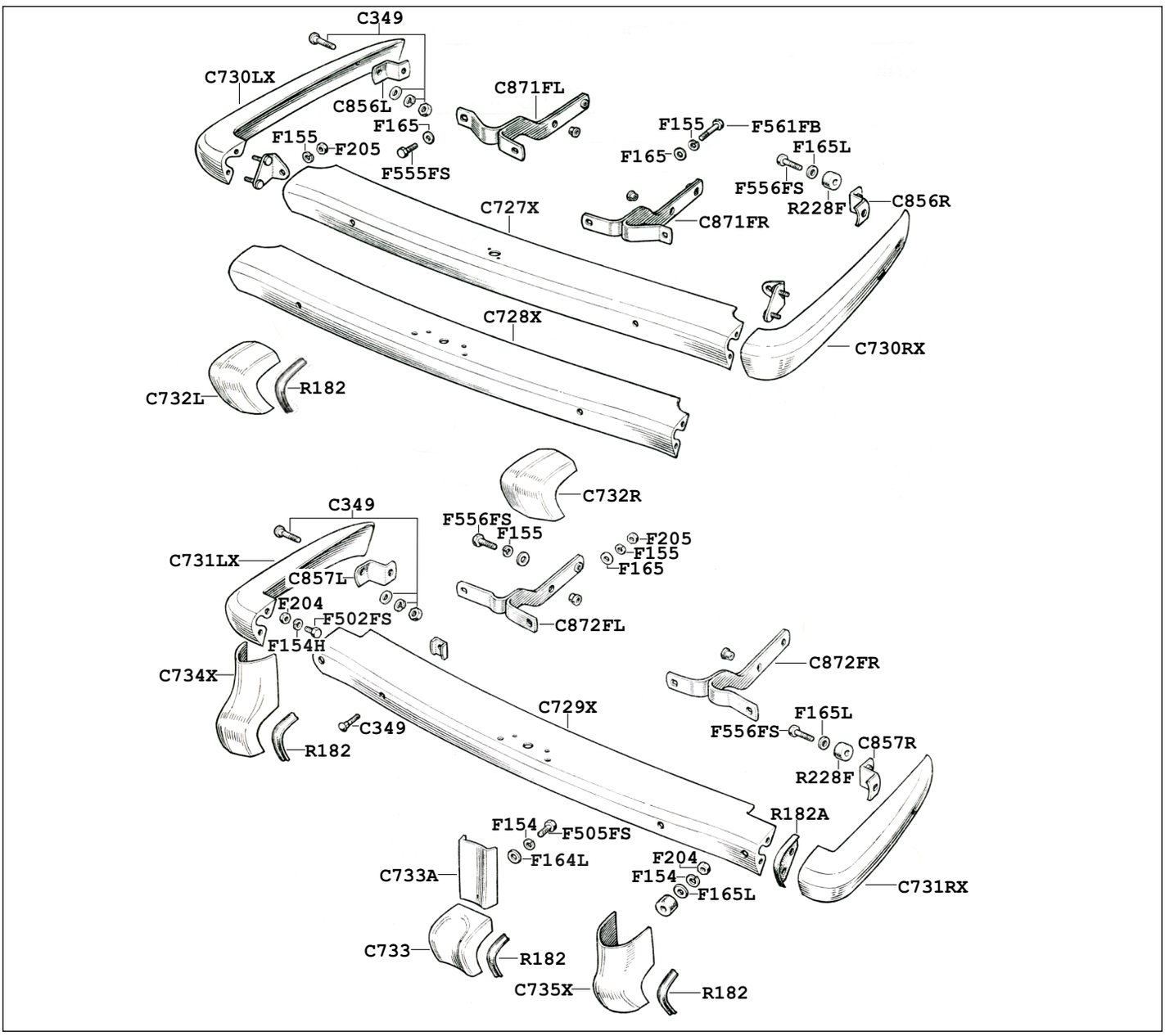


| | | | |
|---|---|---|---|
| C349 | 4 | Chrome Bumper Bolt | |
| C727X | 1 | Bumper Centre | Early A5/MO5/MG3/R6/W15 |
| C728X | 1 | Bumper Centre | Late A5/MO5/MG3/R6/ W15+MG4/R7 |
| C729X | 1 | Bumper Centre | A6/MO6/W16 |
| C730LX | 1 | Side Bumper LH | A5/MO5/MG34/R67/W15 |
| C730RX | 1 | Side Bumper RH | A5/MO5/MG34/R67/W15 |
| C731LX | 1 | Side Bumper LH | A6/MO6/W16 |
| C731RX | 1 | Side Bumper RH | A6/MO6/W16 |
| C732L | 1 | Over Rider LH | A5/MO5/MG34/R67/W15 |
| C732R | 1 | Over Rider RH | A5/MO5/MG34/R67/W15 |
| C733 | 2 | Over Rider | A6 |
| C733A | 2 | Extension | A6 |
| C734X | 2 | Over Rider | MO6 |
| C735X | 2 | Over Rider | W16 |
| C856L | 1 | Bracket - End LH | A5/MO5/MG34/R67/W15 |
| C856R | 1 | Bracket - End RH | A5/MO5/MG34/R67/W15 |
| C857L | 1 | Bracket - End LH | A6/MO6/W16 |
| C857R | 1 | Bracket - End RH | A6/MO6/W16 |
| C871FL | 1 | Bracket LH | A5/MO5/MG34/R67/W15 |
| C871FR | 1 | Bracket RH | A5/MO5/MG34/R67/W15 |
| C872FL | 1 | Bracket LH | A6/MO6/W16 |
| C872FR | 1 | Bracket RH | A6/MO6/W16 |

| | | |
|---|---|---|
| F154 | | Spring Washer 5/16” |
| F154H | | Spring Washer - H.D. 5/16” |
| F155 | | Spring Washer 3/8” |
| F164L | | Plain Washer 5/16” x 1” OD |
| F165 | | Plain Washer 3/8” |
| F165L | | Plain Washer 3/8” x 1” OD |
| F204 | | Nut 5/16” UNF |
| F205 | | Nut 3/8” UNF |
| F502FS | | Set Screw 5/16” UNF x 5/8” |
| F505FS | | Set Screw 5/16” UNF x 1” |
| F555FS | | Set Screw 3/8” UNF x 1” |
| F556FS | | Set Screw 3/8” UNF x 1 1/8” |
| F561FB | | Bolt 3/8” UNF x1 3/4" |
| R182 | 4 | Pad - Over Rider |
| R182A | 2 | Joint Pad A5/MO5/MG34/R67/W15 |
| R228F | 2 | Spacer Rubber |

# Interior Trim

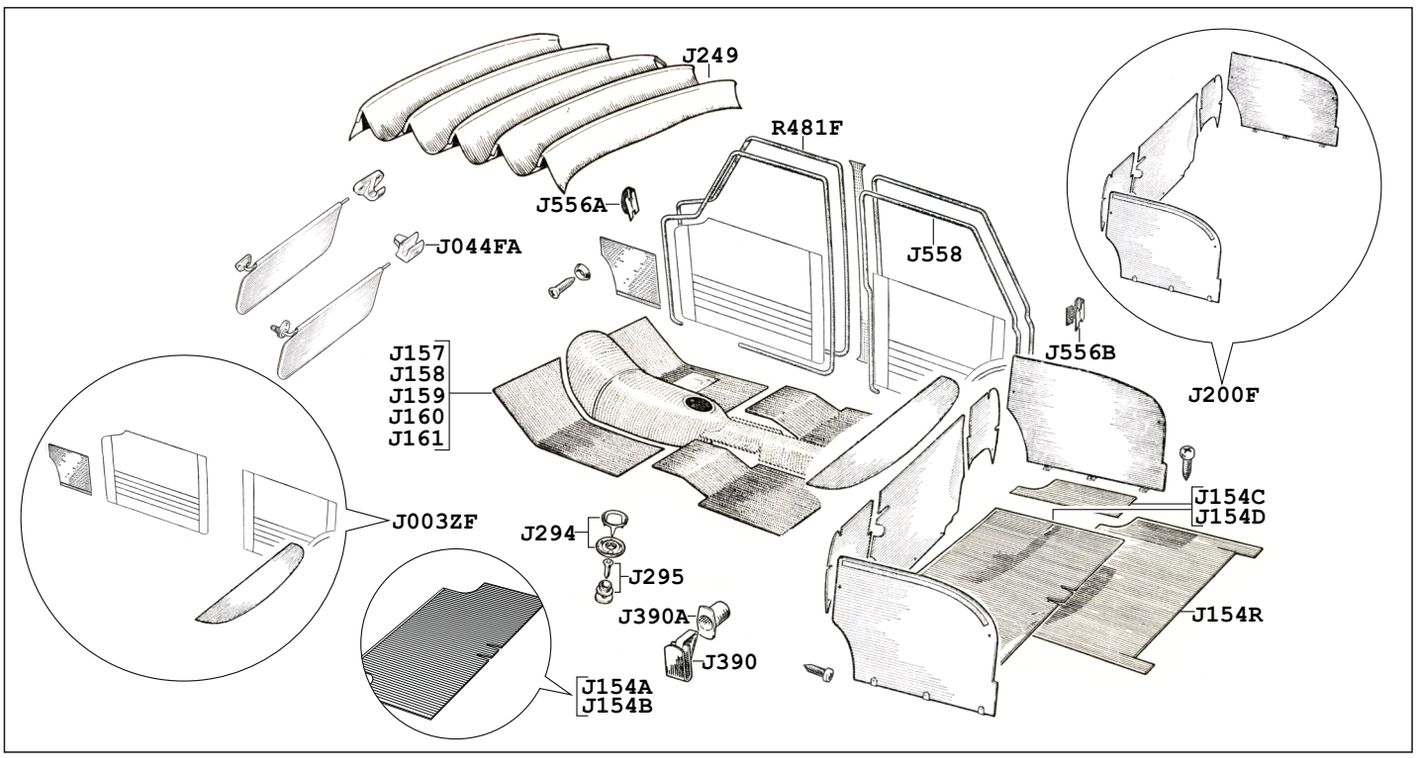


| | | |
|---|---|---|
| C925F | 1 | Interior Mirror |
| C925FZ | 1 | Interior Mirror (repro) |
| | | |
| J003ZF | 1 | Interior Kit - Bare (9 Pc) |
| J004A | | Vinyl Material Black (metre) |
| J004D | | Vinyl Material Beige (metre) |
| J004F | | Vinyl Material Tan (metre) |
| J004M | | Vinyl Material Red (metre) |
| J004P | | Vinyl Material Grey (metre) |
| J044FA | 4 | Clip - Sun visor |
| J154A | 1 | Boot Floor Mat - White |
| J154B | 1 | Boot Floor Mat - Grey |
| J154C | 1 | Boot Mat Set - White (2 Pc) |
| J154D | 1 | Boot Mat Set - Grey |
| J154R | 1 | Boot Floor Mat - Heavy Duty Rubber |
| J157E | 1 | Carpet Set - Green RHD Manual |
| J157F | 1 | Carpet Set - Tan RHD Manual |
| J157FL | 1 | Carpet Set - Tan LHD Manual |
| J157H | 1 | Carpet Set - Blue RHD Manual |
| J157HL | 1 | Carpet Set - Blue LHD Manual |
| J157M | 1 | Carpet Set - Red RHD Manual |
| J157ML | 1 | Carpet Set - Red LHD Manual |
| J157P | 1 | Carpet Set - Grey RHD Manual |
| J158E | 1 | Carpet Set - Green RHD Manual |
| J158EL | 1 | Carpet Set - Green LHD Manual |
| J158F | 1 | Carpet Set - Tan RHD Manual |
| J158H | 1 | Carpet Set - Blue RHD Manual |
| J158HA | 1 | Carpet Set - Blue RHD Auto |
| J158HL | 1 | Carpet Set - Blue LHD Manual |
| J158M | 1 | Carpet Set - Red RHD Manual |
| J158ML | 1 | Carpet Set - Red LHD Manual |
| J158P | 1 | Carpet Set - Grey RHD Manual |
| J158PL | 1 | Carpet Set - Grey LHD Manual |
| J158T | 1 | Carpet Set - Terra RHD Manual |
| J159E | 1 | Carpet Set - Green RHD Manual |
| J159EL | 1 | Carpet Set - Green LHD Manual |
| J159H | 1 | Carpet Set - Blue RHD Manual |
| J159M | 1 | Carpet Set - Red RHD Manual |
| J159MLA | 1 | Carpet Set - Red LHD Auto |
| J159P | 1 | Carpet Set - Grey RHD Manual |
| J160E | 1 | Carpet Set - Green RHD Manual |
| J160EL | 1 | Carpet Set - Green LHD Manual |
| J160H | 1 | Carpet Set - Blue RHD Manual |
| J160M | 1 | Carpet Set - Red RHD Manual |
| J160MA | 1 | Carpet Set - Red LHD Manual |
| J160MLA | 1 | Carpet Set - Red LHD Auto |
| J160P | 1 | Carpet Set - Grey RHD Manual |
| J161E | 1 | Carpet Set - Green RHD Manual |
| J161ELA | 1 | Carpet Set - Green LHD Auto |
| J161H | 1 | Carpet Set - Blue RHD Manual |
| J161HL | 1 | Carpet Set - Blue LHD Manual |
| J161M | 1 | Carpet Set - Red RHD Manual |
| J161MA | 1 | Carpet Set - Red RHD Auto |
| J161ML | 1 | Carpet Set - Red LHD Manual |
| J161PL | 1 | Carpet Set - Grey LHD Manual |
| J200F | 1 | Boot Liner Set Black (5Pc) Set |
| J249FD | 1 | Headlining - Beige Fleck |
| J249FP | 1 | Headlining - Light Grey |
| J249FW | 1 | Headlining - White |
| J294 | 24 | Carpet Prong & Plate |
| J295 | 24 | Stud - Carpet to Floor |
| J390 | 34 | Clip - Door Trim Panel |
| J390A | 34 | Locating Cup - Trim Panel Clip |
| J556A | | Clip - Door Aperture Trim |
| J556B | | Clip - Wheel Arch Aperture Trim |
| J558A | 13 | Aperture Seal Black (metre) |
| J558B | 13 | Aperture Seal Blue (metre) |
| J558D | 13 | Aperture Seal Beige (metre) |
| J558F | 13 | Aperture Seal Tan (metre) |
| J558M | 13 | Aperture Seal Red (metre) |
| J558P | 13 | Aperture Seal Grey (metre) |
| J831 | | Underfelt 6mm (metre) |
| J831C | | Underfelt (pvc faced) (metre) |
| | | |
| R481F | 4 | Seal - Door Edge |

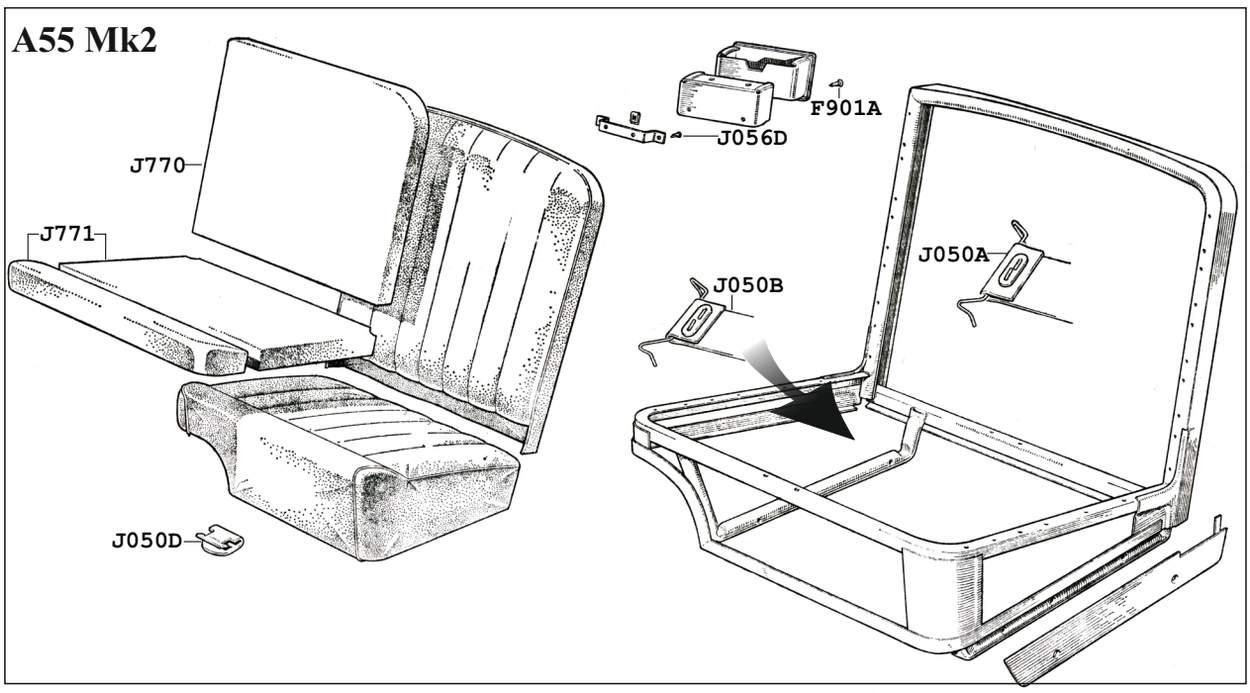


**Austin Seats**

| | | | | | | | |
|---|---|---|---|---|---|---|---|
| F901A | | Screw No 6 x 3/8" (Csk) | | J051B | 2 | Strap Set - Base | Early A6 |
| | | | | J056 | 2 | Back Board | |
| J050 | 2 | Seat Diaphragm | Late A6 | J056C | 22 | Clip - Backboard to Frame | |
| J050A | 2 | Strap Set - Back | A5 | J056D | 44 | Rivet - Backboard Clip | |
| J050B | 2 | Strap Set - Base | A5 | J770 | 2 | Foam Kit - Back | A5 |
| J050C | 26 | Clip - Diaphragm | Late A6 | J771 | 2 | Foam Kit - Base | A5 |
| J050D | AR | Clip - Covers to Frame | | J772 | 2 | Foam Kit - Back | A6 |
| J051A | 2 | Strap Set - Back | A6 | J773 | 2 | Foam Kit - Base | A6 |

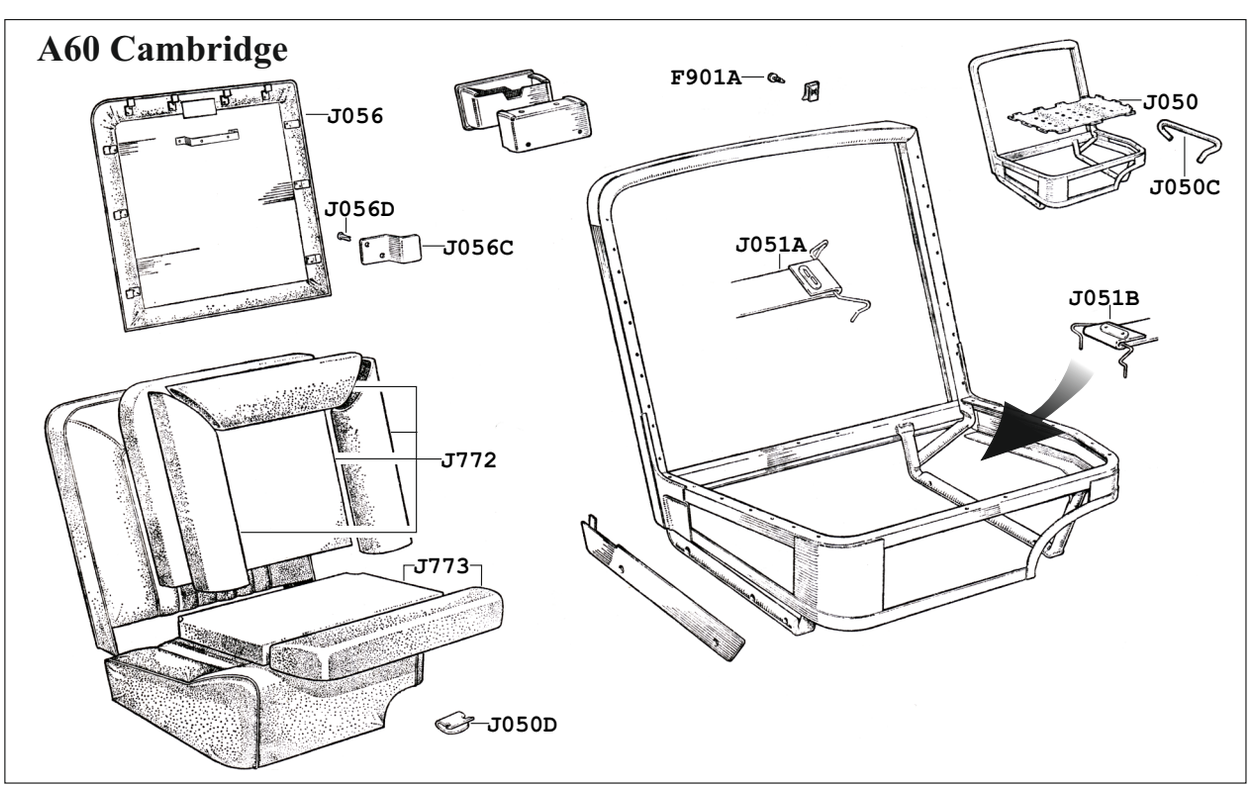

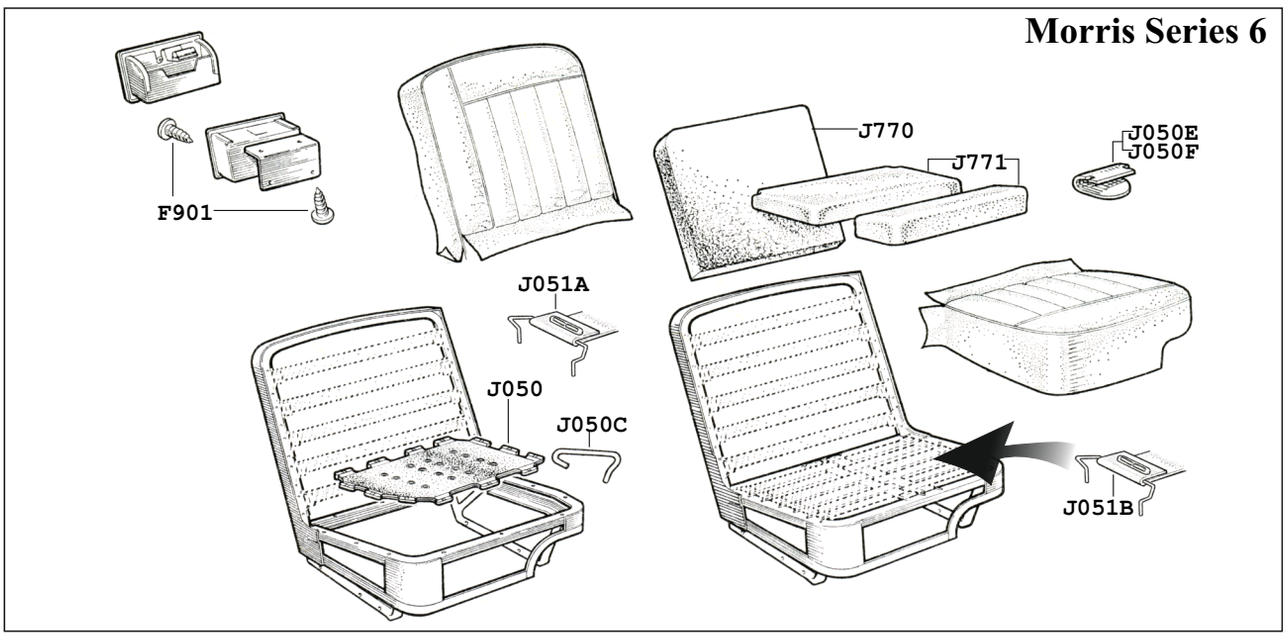


**Morris Series 6 Seats**

| | | | |
|---|---|---|---|
| F901 | | Panhead Screw No 6 x 3/8” | |
| J050 | 2 | Seat Diaphragm | Late MO6 |
| J050C | 26 | Clip - Diaphragm | Early MO6 |
| J050E | AR | Clip - Covers to Frame | |
| J050F | AR | Clip - Covers to Frame | |
| J051A | 2 | Strap Set - Back | MO5/6 |
| J051B | 2 | Strap Set - Base | Early MO6 |
| J770 | 2 | Foam Kit - Back | |
| J771 | 2 | Foam Kit - Base | |

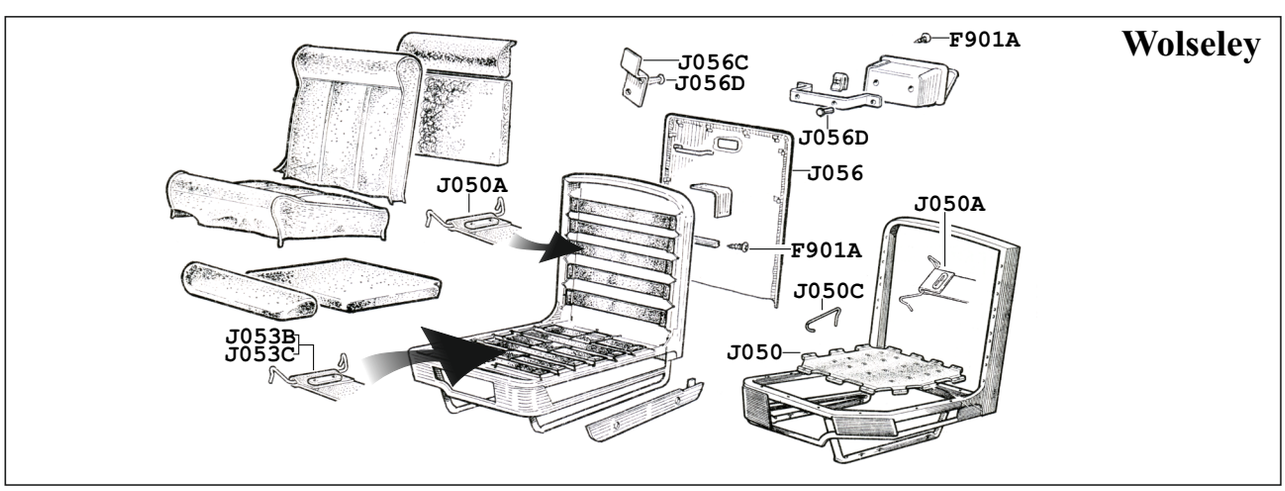


**Wolseley Seats**

| | | | |
|---|---|---|---|
| F901A | | Screw No 6 x 3/8” (Csk) | |
| J050 | 2 | Diaphragm - Base | Late W16 |
| J050A | 2 | Strap Set - Back | W15/W16 |
| J050C | 26 | Clip - Diaphragm | Late W16 |
| J053B | 2 | Strap Set - Base | W15 |
| J053C | 2 | Strap Set - Base | Early W16 |
| J056 | 2 | Backboard | |
| J056C | AR | Clip - Backboard to Frame | |
| J056D | AR | Rivet - Backboard Clip | |

## MG Mk 3 & Riley 4/68

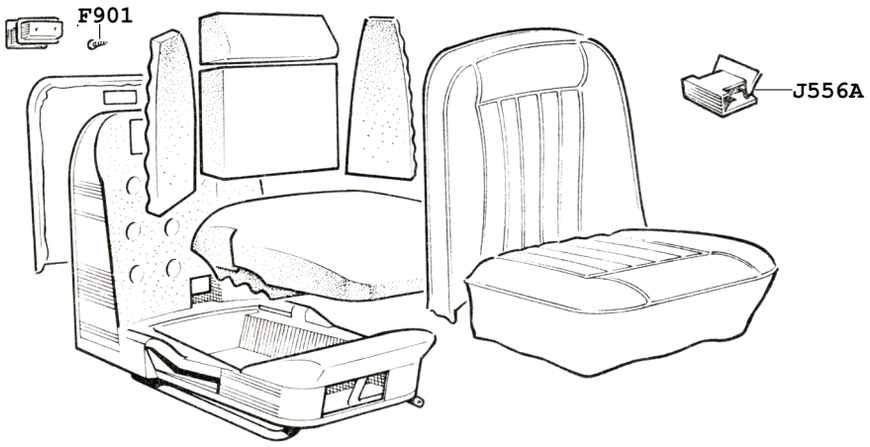


**MG & Riley Seats**

| | | | |
|---|---|---|---|
| F901 | | Panhead Screw No 6 x 3/8” | |
| J050 | 2 | Diaphragm - Seat Base | Late MG4/R7 |
| J050C | 26 | Clip - Diaphragm | Late MG4/R7 |
| J052A | 2 | Strap Set - Seat back | MG4/R72 |
| J052B | 2 | Strap Set - Seat Base | Early MG4/R7 |
| J056 | 2 | Back Board | |
| J056C | 26 | Clip - Back board | |
| J056D | 52 | Rivet - Back Board | |
| J556A | AR | Clip - Covers to Frame | |
| J776 | 2 | Foam Kit - Back | MG4/R7 |
| J777 | 2 | Foam Kit - Base | MG4/R7 |

## MG Mk 4 & Riley 4/72

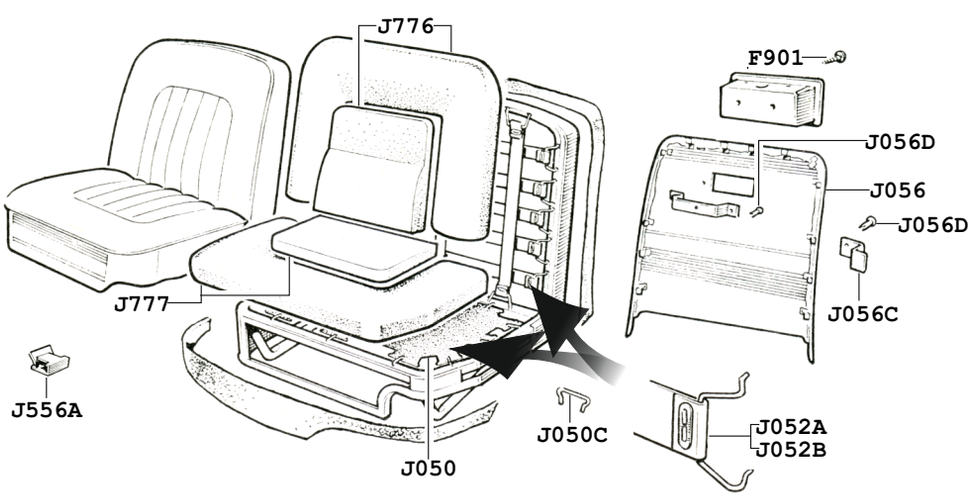

## A55 Mk2, MG Mk3, Riley 4/68 & Wolseley 15/60

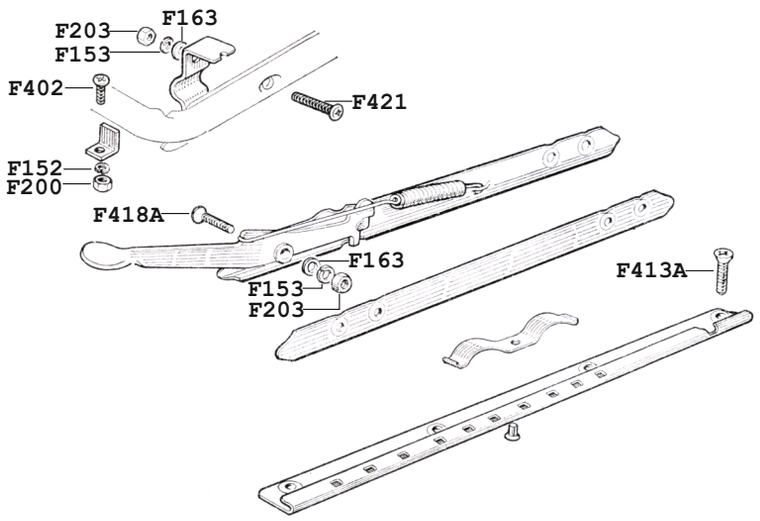


F152 Spring Washer 3/16"
F153 Spring Washer 1/4"
F163 Flat Washer 1/4"
F200 Full Nut 10/32" UNF
F203 Full Nut 1/4" UNF
F402 Panhead Screw 3/16" UNF x 1/2"
F413A Countersunk Screw 1/4" UNF x 5/8"
F418A Countersunk Screw 1/4" UNF x 1 3/8"
F419A Countersunk Screw 1/4" UNF x 1 1/2"
F421 Panhead Screw 1/4" UNF x 1 3/4"
F421A Countersunk Screw 1/4" UNF x 1 3/4"

## A60, Morris Oxford Series 6, MG Mk4, Riley 4/72 & Wolseley 16/60

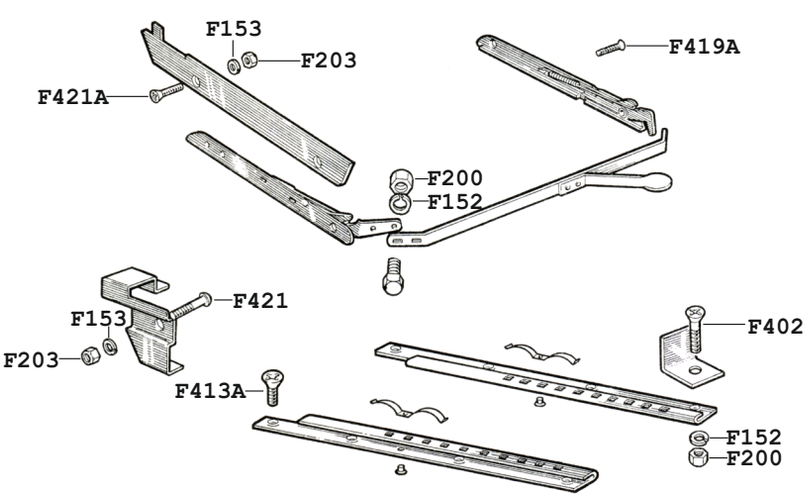

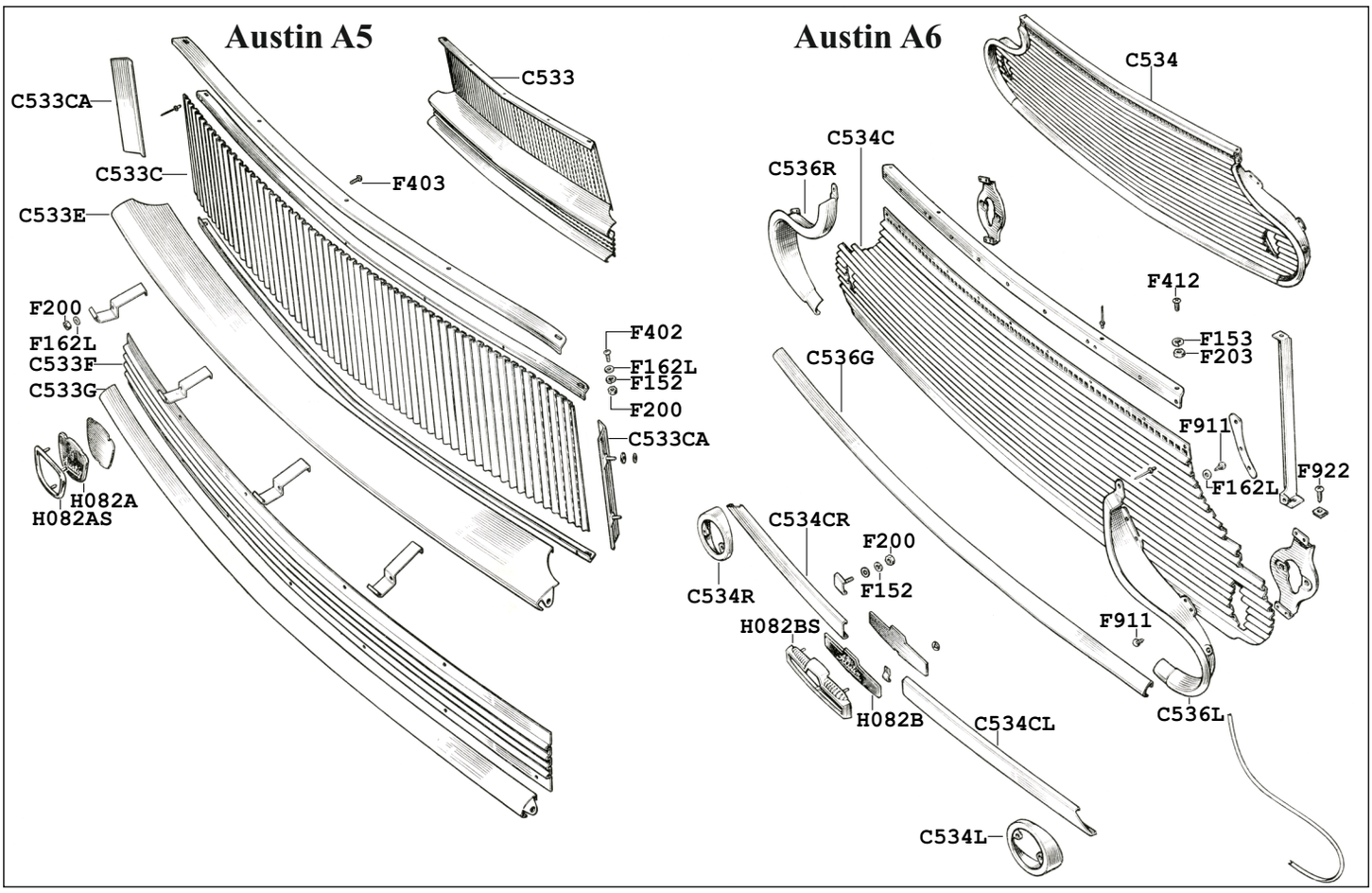


| | | | | | | | |
|---|---|---|---|---|---|---|---|
| C533 | 1 | Grille Assembly | A5 | F152 | | Spring Washer 3/16” | |
| C533C | 1 | Grille Mesh - Upper | Late A5 | F153 | | Spring Washer 1/4" | |
| C533CA | 2 | Finisher - Side Grille | Early A5 | F162L | | Plain Washer 3/16” x 1/2" | |
| C533E | 1 | Grille Bar - Centre | A5 | F200 | | Plain Nut 10.32” UNF | |
| C533F | 1 | Grille Set - Lower | A5 | F203 | | Plain Nut 1/4" UNF | |
| C533G | 1 | Grille Bar - Lower | A5 | F402 | | Screw 3/16” x 1/2" UNF | |
| C534 | 1 | Grille Surround | A6 | F403 | | Screw 3/16” x 5/8” UNF | |
| C534C | 1 | Grille Mesh | A6 | F412 | | Screw 1/4" x 1/2" UNF | |
| C534CL | 1 | Motif Grille Bar LH | A6 | F911 | | Screw No 10 x 1/2" | |
| C534CR | 1 | Motif Grille Bar RH | A6 | F922 | | Screw No 12 x 5/8” | |
| C534L | 1 | Chrome Plinth LH | A6 | | | | |
| C534R | 1 | Chrome Plinth RH | A6 | H082A | 1 | Austin Badge | A5 |
| C536G | 1 | Grille Bar - Lower | A6 | H082AS | 1 | Badge Surround | A5 |
| C536L | 1 | Grille Surround LH | A6 | H082B | 1 | Austin Badge | A6 |
| C536R | 1 | Grille Surround RH | A6 | H082BS | 1 | Badge Surround | A6 |

## MO5

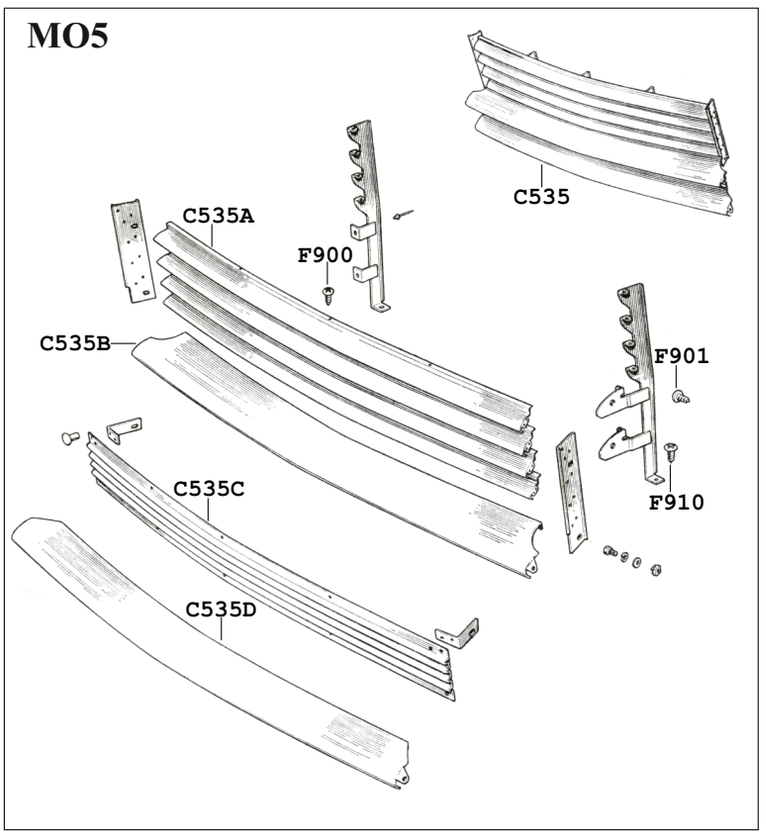


**Morris Grilles**

| | | | |
|---|---|---|---|
| C534L | 1 | Chrome Plinth LH | MO6 |
| C534R | 1 | Chrome Plinth RH | MO6 |
| C535 | 1 | Grille Assembly | MO5 |
| C535A | 1 | Grille Bar - Upper | MO5 |
| C535B | 1 | Grille Bar - Centre | MO5 |
| C535C | 1 | Grille Set - Lower | MO5 |
| C535D | 1 | Grille Bar - Lower | MO5 |
| C536 | 1 | Grille Assembly | MO6 |
| C536A | 1 | Grille Bar No 1 | MO6 |
| C536B | 1 | Grille Bar No 2 | MO6 |
| C536C | 1 | Grille Bar No 3 | MO6 |
| C536D | 1 | Grille Bar No 4 | MO6 |
| C536E | 2 | Grille Bar No 5 + 6 | MO6 |
| C536F | 1 | Grille Bar No 7 | MO6 |
| C536G | 1 | Grille Bar - Lower | MO6 |
| C536L | 1 | Grille Surround LH | MO6 |
| C536R | 1 | Grille Surround RH | MO6 |

| | |
|---|---|
| F900 | Screw No 6 x 1/4" |
| F901 | Screw No 6 x 3/8” |
| F910 | Screw No 10 x 3/8” |

## MO6

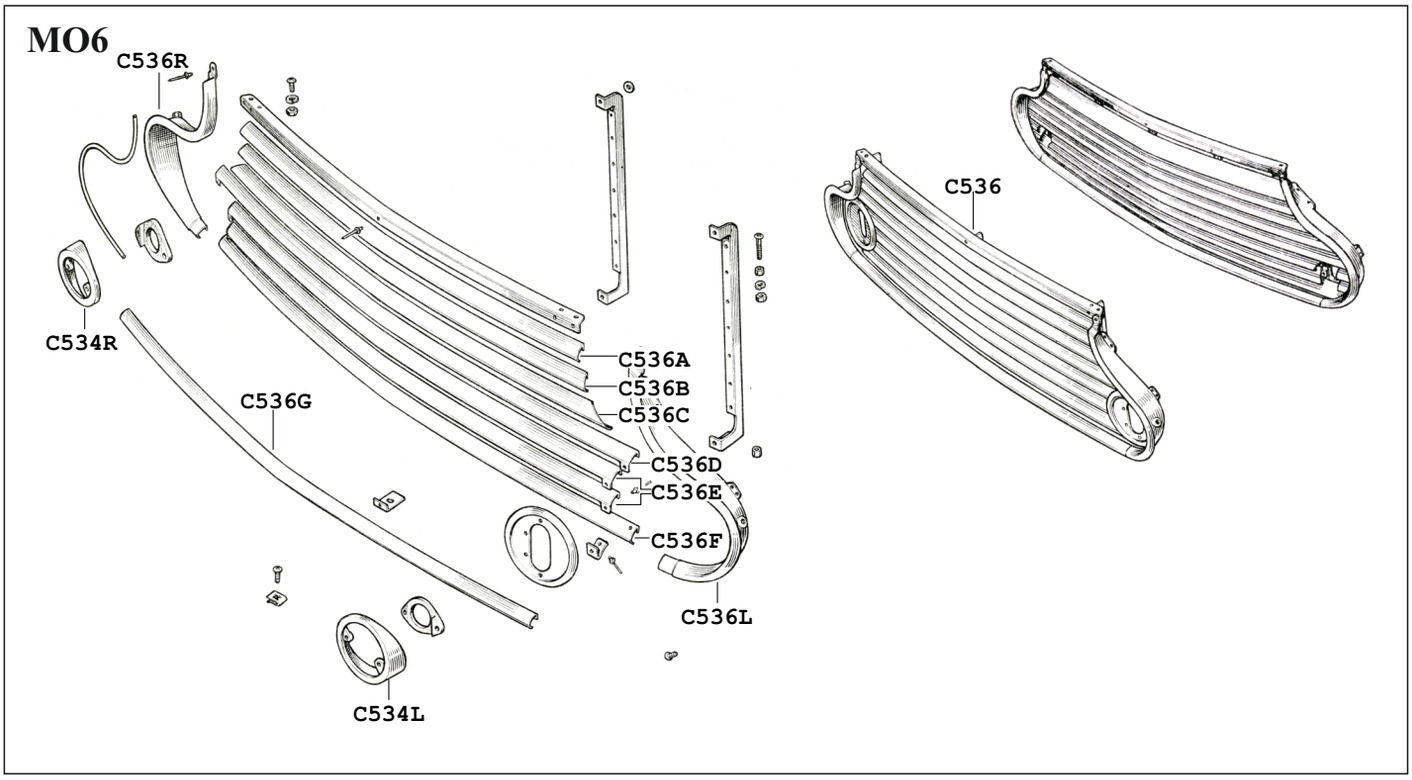

| | | |
|---|---|---|
| C537F | 1 | Grille Surround |
| C537FD | 1 | Centre Bar |
| F030 | | Screw 1/4" x 1/2" ACME |
| F030A | | Spire Clip 1/4" ACME |
| F031A | | Spire Clip |
| F152 | | Spring Washer 3/16” |
| F153 | | Spring Washer 1/4" |
| F163 | | Plain Washer 1/4" |
| F200 | | Plain Nut 10.32 UNF |
| F453FS | | Set Screw 1/4" x 3/4" UNF |
| H080A | | Grille Badge |
| T150F | | Support Panel |

## MG Grille

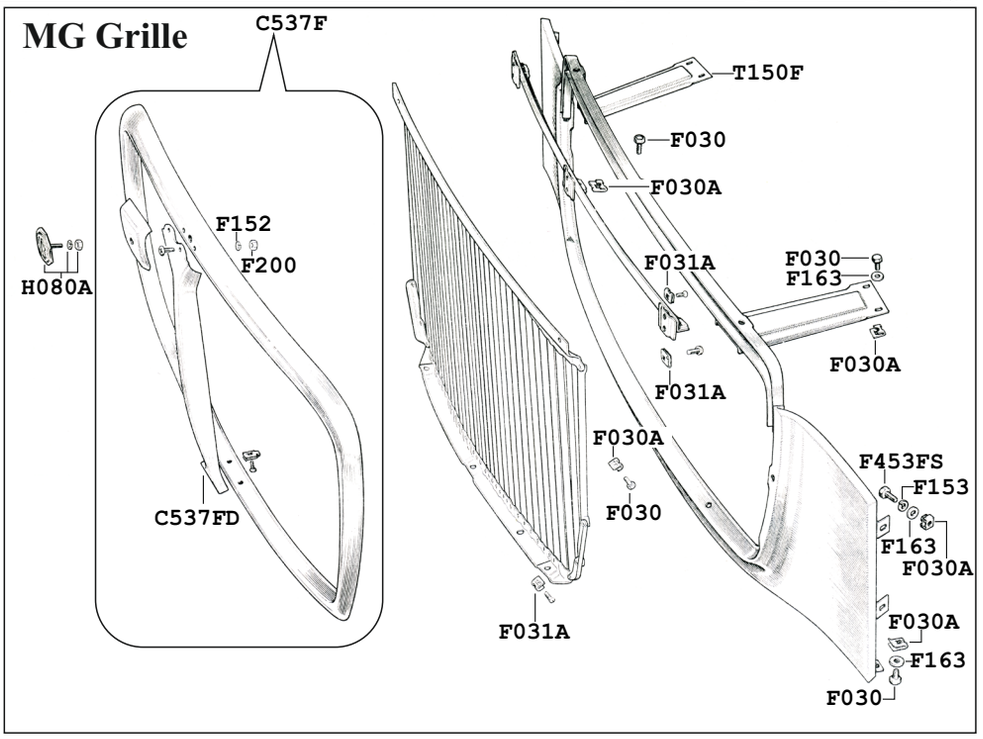


## Wolseley Grille

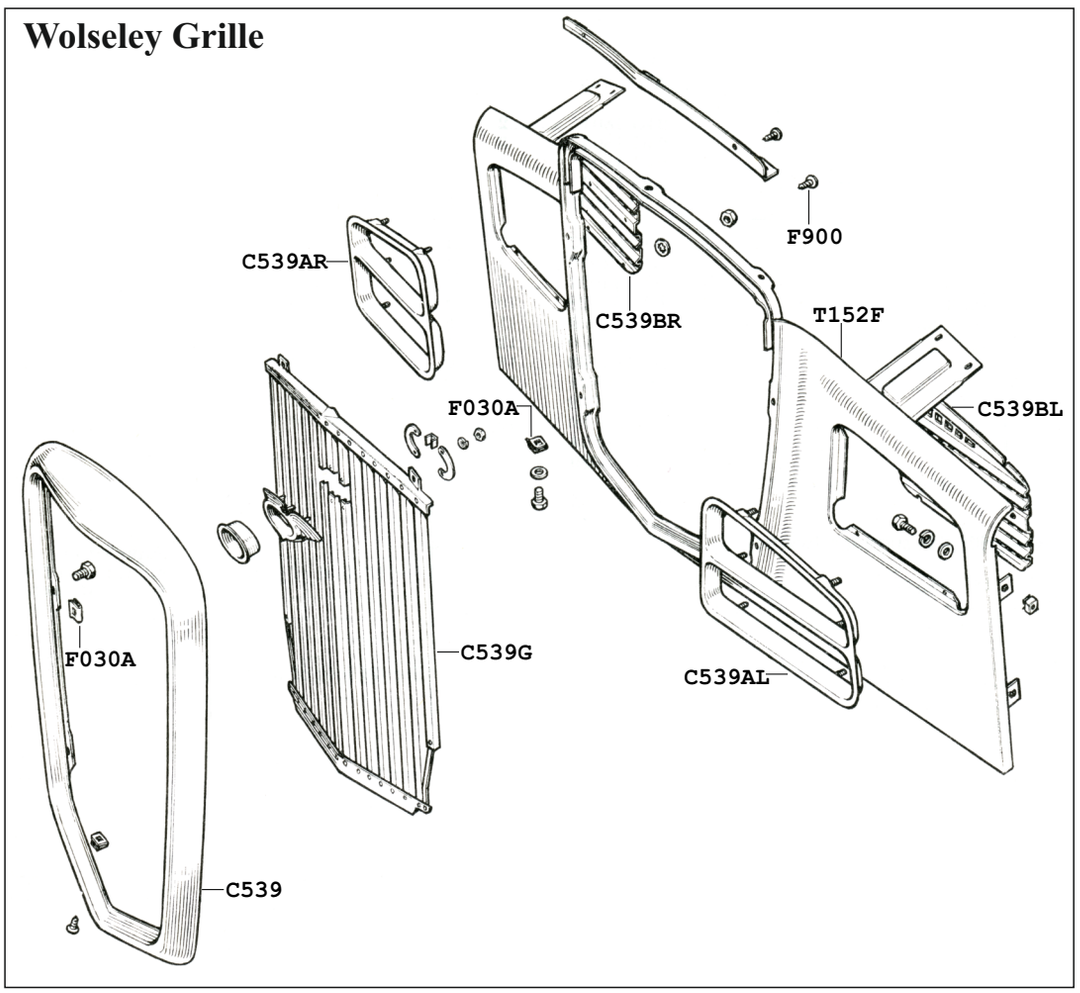


| | | |
|---|---|---|
| C539 | 1 | Grille Surround |
| C539AL | 1 | Side Surround LH |
| C539AR | 1 | Side Surround RH |
| C539BL | 1 | Side Grille LH |
| C539BR | 1 | Side Grille RH |
| C539G | 1 | Grille Slat Set |
| F030A | | Spire Clip 1/4" ACME |
| F900 | | Screw No 6 x 1/4" |
| T152F | 1 | Support Panel |

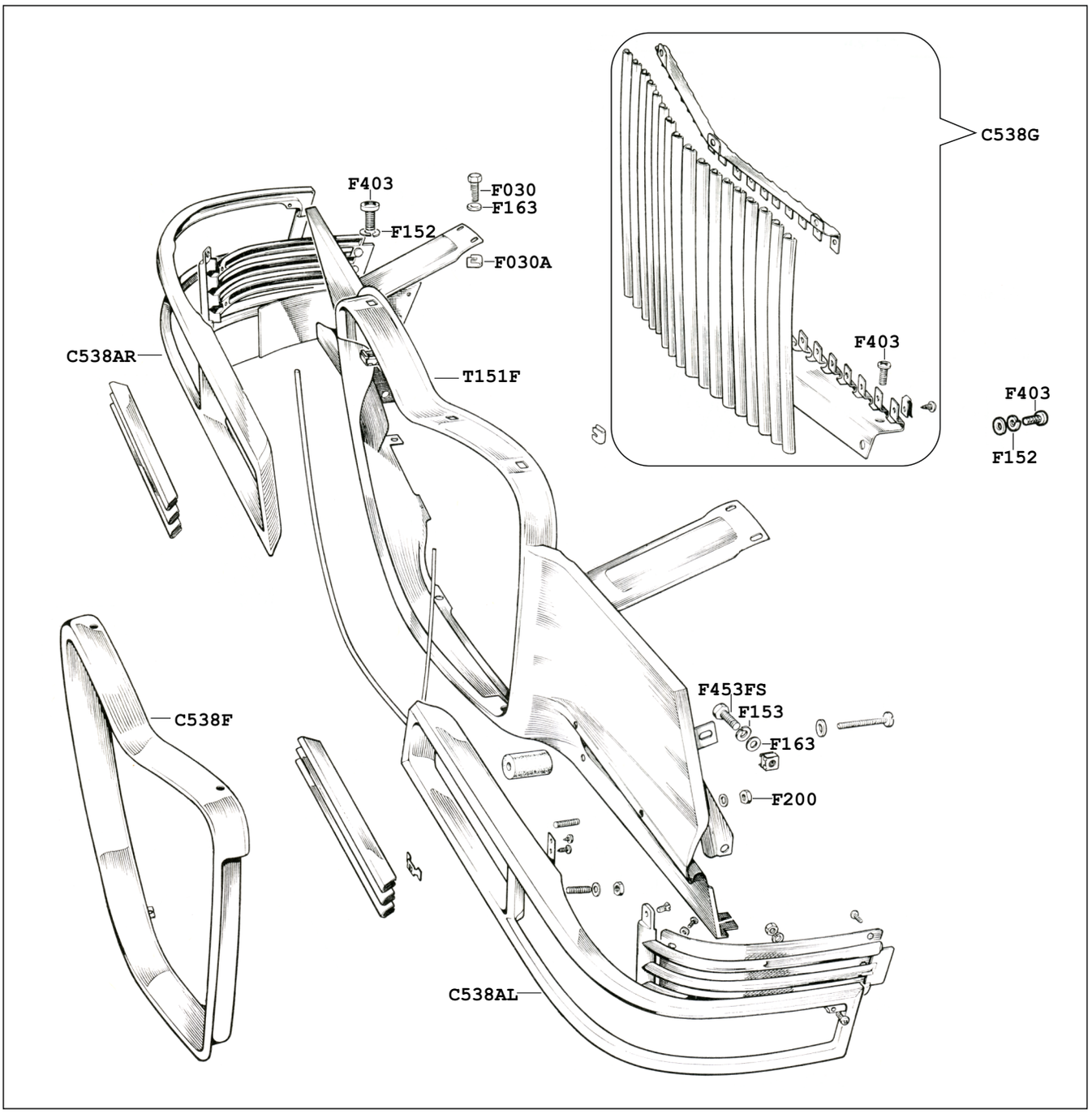


| | | |
|---|---|---|
| C538AL | 1 | Wing Surround LH |
| C538AR | 1 | Wing Surround RH |
| C538F | 1 | Grille Surround |
| C538G | 1 | Grille Slats |
| | | |
| F030 | | Screw 1/4" x 1/2" ACME |
| F030A | | Spire Clip 1/4" ACME |
| F152 | | Spring Washer 3/16” |
| F153 | | Spring Washer 1/4" |
| F163 | | Plain Washer 1/4" |
| F200 | | Plain Nut 10.32 UNF |
| F403 | | Screw 3/16” x 5/8” UNF |
| F453FS | | Set Screw 1/4" x 3/4" UNF |
| | | |
| T151F | 1 | Support Panel |

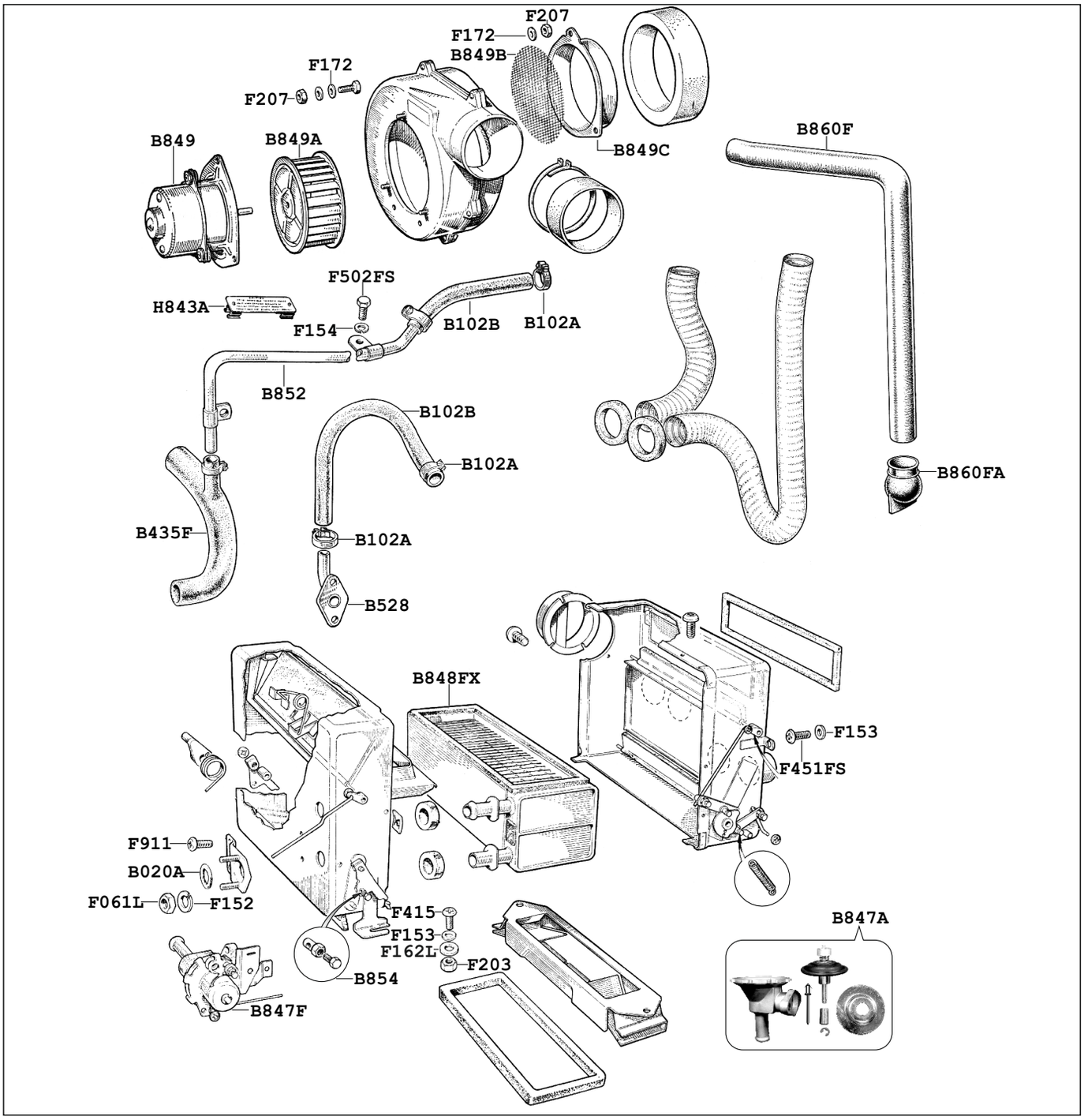


| | | |
|---|---|---|
| B020A | 1 | Seal – Filter Bolt |
| B102 | 1 | Hose & Clip Set |
| B102A | 6 | Hose Clip (Stainless) |
| B102B | 3 | Hose (per metre) |
| B435F | 1 | Hose - Radiator Bottom |
| B528 | 1 | Outlet - Cylinder Head |
| B847A | 1 | Valve Repair Kit |
| B847F | 1 | Valve Complete |
| B848FX | 1 | Matrix/Radiator *exchange* |
| B849 | 1 | Motor |
| B849A | 1 | Plastic Fan |
| B849B | 1 | Mesh - Air Intake |
| B849C | 1 | Air Intake Flange |
| B852 | 1 | Copper Pipe |
| B854 | | Cable Clamp |
| B860F | 2 | Drain Tube |
| B860FA | 2 | Vent Valve |

| | |
|---|---|
| F061L | Nut 2BA Locking |
| F152 | Spring Washer 3/16” |
| F153 | Spring Washer 1/4" |
| F154 | Spring Washer 5/16” |
| F162L | Plain Washer 3/16” |
| F172 | Internal Star Washer 3/16” |
| F203 | Nut 1/4" UNF |
| F207 | Nut 1/2" UNF |
| F415 | Screw 1/4" x 7/8” UNF Panhead |
| F451FS | Set Screw 1/4" UNF x 1/2" |
| F502FS | Set Screw 5/16”UNF x 5/8” |
| F911 | Screw 10 x 1/2” Panhead |
| | |
| H843A | Caution Plate |

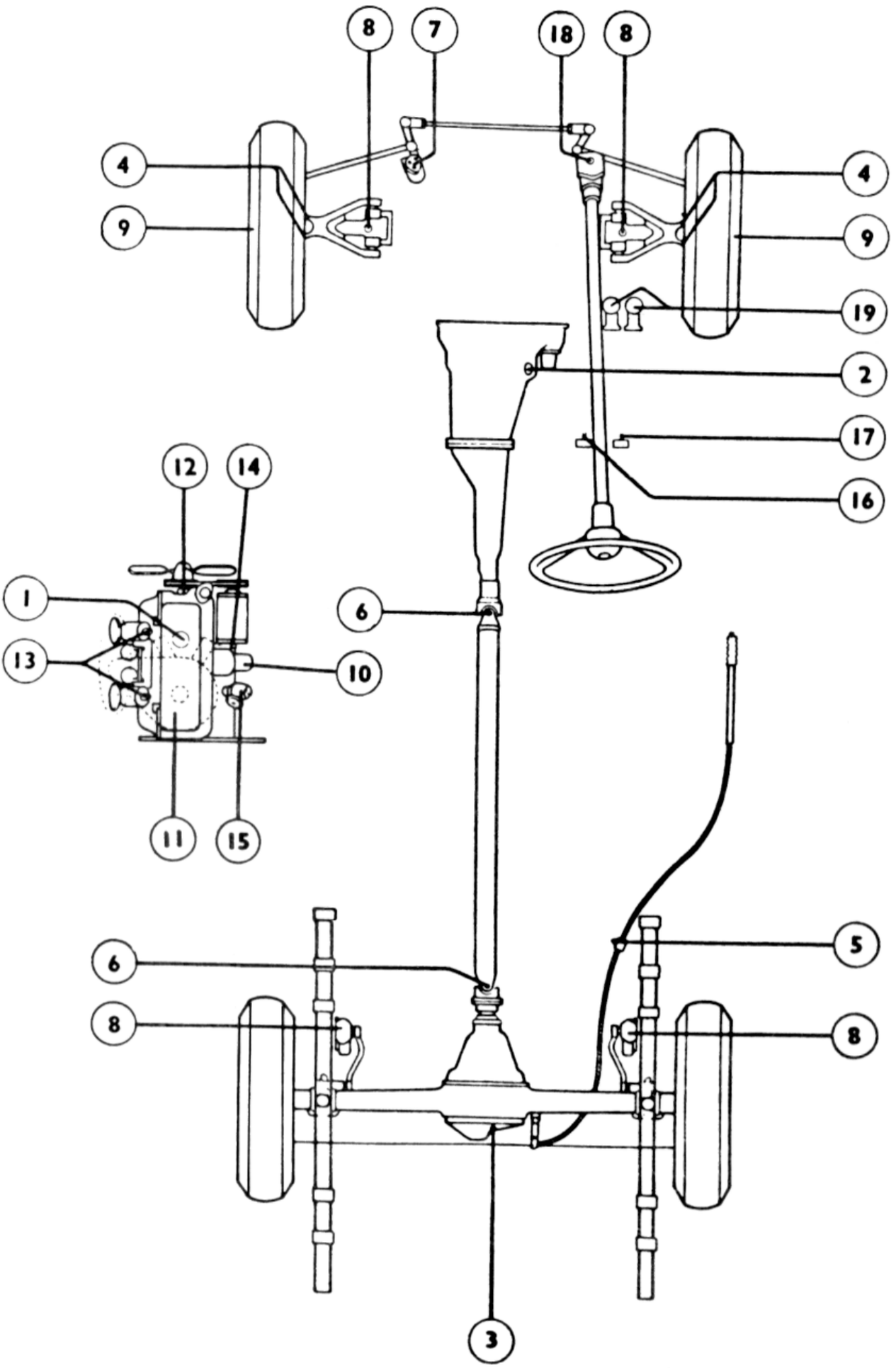
8
7
18
8
4
9
4
9
19
2
17
16
12
14
1
13
6
10
11
15
6
8
5
8
3

| Frequency | Items Requiring Attention |
|---|---|
| Daily | 1 |
| 3,000 Miles | 2 - 4 - 5 - 6 - 7 - 11 - 13 - 18 - 19 |
| 3,000 Miles or 3 Months | 1 |
| 6,000 Miles | 2 - 3 - 8 - 9 - 14 - 15 |
| 6,000 Miles or 6 Months | 1 - 2 - 3 - 4 - 5 - 6 - 7 - 8 - 9 - 10 |
| 12,000 Miles | 11 - 12 - 16 - 17 |

| Item No | Application | Product | Mileage | Remarks |
|---|---|---|---|---|
| 1 | Engine (6½ pints)<br>With Filter (7½ pints) | **X499** | Daily<br>6000 or 6months | Top up if necessary<br>Drain, flush (when oil filter services required), refill |
| 2 | Gearbox - Manual - (4½ pints) | **X507** | 6000 | Top up if necessary |
| 2 | Gearbox - Auto - (11pints) | **X552** | 3000 | Top up if necessary |
| 3 | Rear Axle (2¼ pints) | **X510** | 6000 | Top up if necessary |
| 4 | Front Suspension & Steering Swivel Pins | **X614** | 3000 | Grease Gun - 6 fitting |
| 5 | Handbrake Cable | | 3000 | Grease Gun - 1 fitting |
| 6 | Prop Shaft Universals | | 3000 | Grease Gun - 2 fitting |
| 7 | Steering Idler | | 3000 | Top up if necessary |
| 8 | Shock Absorbers | **X525** | 6000 | Top up if necessary |
| 9 | Wheel Bearings - Front | **X536** | 6000 | Top up if necessary |
| 10 | Oil Filter | **B020/B027A** | 6000 or 6 months | Renew Element |
| 11 | Air Cleaner AMW >62 | **A573FA** | 12000 | Renew Element |
| 11 | Air Cleaner AMW 62> | **A573FB** | 12000 | Renew Element |
| 11 | Air Cleaner - MG/Riley | | 6000 or 6 months | Remove, wash in petrol, dry, refill to oil level |
| 12 | Water Pump | **X537** | 12000 | Remove plugs, inject small quantity & relace plugs |
| 13 | Carburetor Dashpots | **X531** | 3000 | Top up to ½" from top |
| 14 | Dynamo | | 6000 | Oil can - few drops |
| 15 | Distributor | | 6000 | Oil can - few drops |
| 16 | Speedometer Cable | | 12000 | Remove, clean, smear lightly & replace |
| 17 | Tachometer Cable | | 12000 | Remove, clean, smear lightly & replace |
| 18 | Steering Gearbox | **X520B** | 3000 | Top up if necessary |
| 19 | Brake & Clutch Master Cylinders | | 3000 | Top up if necessary |

## Lubricants

X499 Penrite Classic 20w/50 5 Litre
X502 Penrite Running - In Oil 5 Litre
X502A Penrite Running - In Oil 1 Litre
X507 Penrite Gearbox Oil 30 5 Litre
X507A Penrite Gearbox Oil 30 1 Litre
X510 Penrite Hypoid 85/140 5 Litre
X510A Penrite Hypoid 85/140 1 Litre

X520B Penrite Steering Box Lube 500ml
X525 Penrite Shock Fluid No 1 500ml
X531 Penrite Damper Oil 125ml
X536 Penrite High Melt Bearing Grease 500gm
X537 Penrite Water Pump Grease 50gm
X614 Synionic Multi Purpose Grease 400gm
X615 Synionic SML100 Penetrating Lube 354ml

AUSTIN
LONGBRIDGE BIRMINGHAM ENGLAND
WHEN ORDERING REPLACEMENTS QUOTE
CAR N°
ENG N°
SEE ENGINE
H839FA
MORRIS MOTORS LTD.
COWLEY, OXFORD, ENGLAND.
WHEN ORDERING REPLACEMENTS QUOTE
CAR No.
ENG No.
SEE ENGINE
H839FB
THE M.G. CAR COMPANY LTD.
ABINGDON-ON-THAMES, ENGLAND.
WHEN ORDERING REPLACEMENTS QUOTE
CAR No.
FRONT SEAT BELT ANCHORAGES COMPLY WITH SPECN. BS. AU. 48-1965
H839FC
RILEY MOTORS LTD.
ABINGDON - ON - THAMES, ENGLAND
WHEN ORDERING REPLACEMENTS QUOTE
CAR N°
ENG N°
SEE ENGINE
H839FD
WOLSELEY MOTORS LTD.
COWLEY, OXFORD, ENGLAND.
WHEN ORDERING REPLACEMENTS QUOTE
CAR N°
ENG N°
SEE ENGINE
H839FF
WOLSELEY MOTORS LTD.
COWLEY, OXFORD, ENGLAND.
WHEN ORDERING REPLACEMENTS QUOTE
CAR No.
FRONT SEAT BELT ANCHORAGES COMPLY WITH SPEC. BS. AU. 48-1965
H839FG
SMITHS
MADE IN UK.
CODE. FHR 3456 PM
MODEL
VOLTAGE. 12
H843E
CAUTION
IT IS IMPOSSIBLE TO DRAIN HEATER UNIT WHEN DRAINING REMAINDER OF COOLING SYSTEM UNDER FREEZING CONDITIONS BLUECOL ANTI-FREEZE MUST BE USED
H843D
SMITHS
FRESH AIR HEATING UNIT
MODEL F.350
CODE
MANUFACTURED IN ENGLAND
UNDER THE FOLLOWING PATENTS
GT BRITAIN 703359
FRANCE BREVETE SG.DG 1045200
AUSTRALIA 156102
NEW ZEALAND 106588 (1951)
SOUTH AFRICA 14486
ITALY 481685 - BELGIUM 507202
SWITZERLAND 295876
NORWAY 83504 - SWEDEN 145596
GERMANY 936193
(OTHERS PENDING)
H843C
TUDOR
H799
LUCAS
ELECTRIC
SCREENJET
MADE IN LUCAS ENGLAND
H849
CAUTION
IT IS IMPOSSIBLE TO DRAIN HEATER UNIT WHEN DRAINING REMAINDER OF COOLING SYSTEM-UNDER FREEZING CONDITIONS BLUECOL ANTI - FREEZE MUST BE USED
H843A
TYPE
12V
HA 12
LUCAS
MADE IN
COIL
ENGLAND
H848
Austin
H900
Riley
H915
WOLSELEY
H925
MORRIS
Sales and Service
H905
MG
H910
THE BRITISH MOTOR CORPORATION LTD.
BMC
H920
H513